SEC. 14, TN.5S RG.2E

THIS MAP IS FOR TAX PURPOSES ONLY.
THIS OFFICE WILL NOT ASSUME LIABILITY FOR REPRESENTATION, MEASUREMENTS OR ACREAGE.

THE ORIGINAL PLAT OF THIS SUBDIVISION IS ON FILE WITH THE PINAL COUNTY RECORDERS OFFICE, FOR COMPLETE INFORMATION OF PLAT AND CC&R's CALL (520) 866-7100.

510-38
2/2

THUNDERBIRD FARMS CENTRAL

BK.18 - PG.17

VICINITY MAP

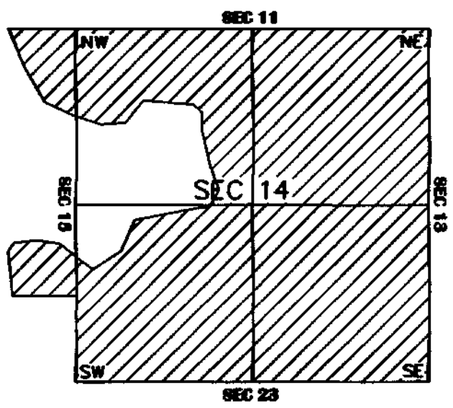

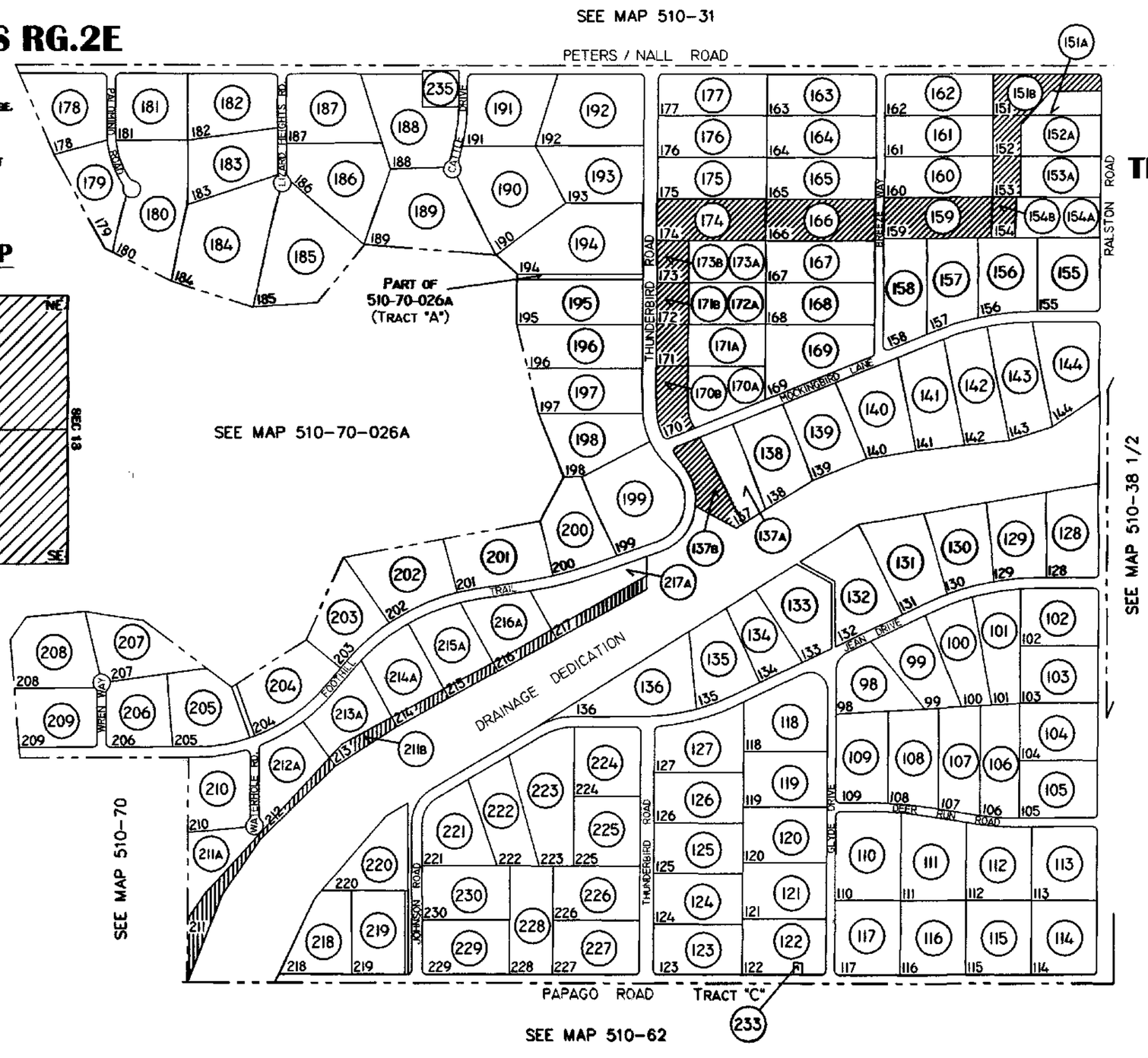

SCALE: 1" = 600'

11-28-2001