Call at least two full working days before you begin excavation.
ARIZONA 811
Arizona Blue Stake, Inc.
Dial 8-1-1 or 1-800-STAKE-IT (782-5348)
In Maricopa County: (602) 263-1100

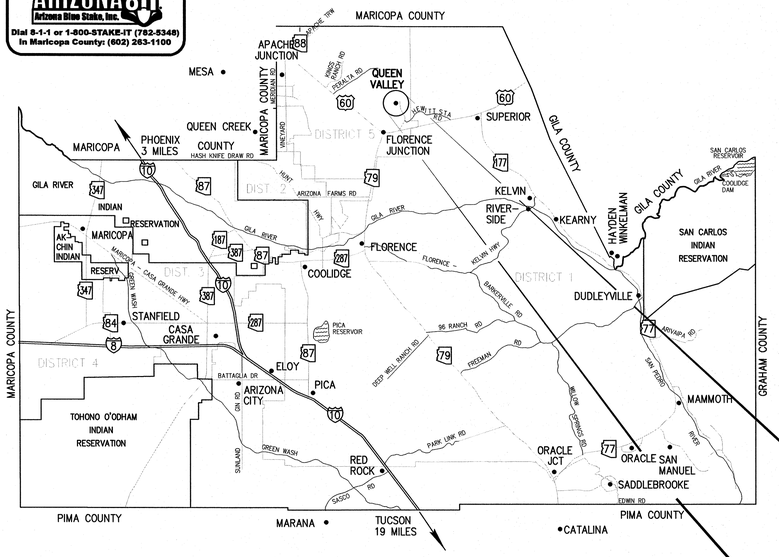

VICINITY MAP

ATKINS

QUEEN VALLEY

AT NORTH SHARON DRIVE AND QUEEN CREEK
T1S, R10E, SECTION 35

FLOOD MITIGATION PROJECT, PHASE II

PROJECT NO. 100031696

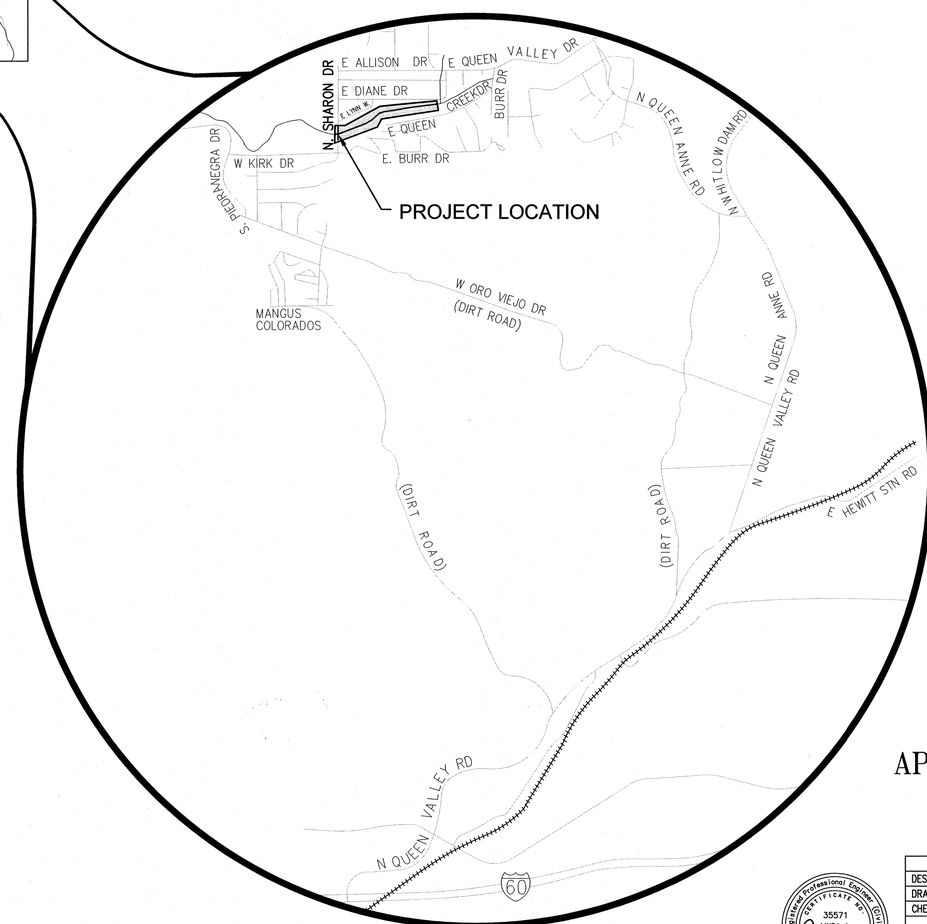

PINAL • COUNTY
wide open opportunity

PINAL COUNTY BOARD OF SUPERVISORS

DISTRICT ONE - PETE RIOS
DISTRICT TWO - CHERYL CHASE
DISTRICT THREE - STEPHEN MILLER
DISTRICT FOUR - ANTHONY SMITH
DISTRICT FIVE - TODD HOUSE

MANAGEMENT

COUNTY MANAGER - MR. GREG STANLEY, P.E.
COUNTY ENGINEER - MR. SCOTT BENDER, P.E., CFM
PUBLIC WORKS DIRECTOR - MR. LOUIS ANDERSEN

PROJECT ENGINEER

LINDA A. POTTER, P.E., CFM
ATKINS North America, Inc.
20860 N. Tatum Blvd. Suite 260
Phone: 480.419.7275
Fax: 480.419.7202

INDEX TO SHEETS

DESCRIPTION	SHEET NO
COVER SHEET	1
GENERAL NOTES & LEGEND	2–3
STANDARD DETAILS	4–7
DETAILS	8
DEMOLITION PLAN	9–10
SHARON DRIVE – CHANNEL IMPROVEMENTS PLAN & PROFILE	11
CHANNEL IMPROVEMENTS PLAN & PROFILE	12–14
CHANNEL SECTIONS A THRU D	15
CHANNEL SECTIONS E THRU H	16
CHANNEL SECTIONS I, J & K	17
WATER AND UTILITY IMPROVEMENTS, PLAN AND PROFILE	18
CHANNEL IMPROVEMENTS LANDSCAPE PLAN	19–20

AS-BUILT CERTIFICATION

I HEREBY CERTIFY THAT THE "RECORD DRAWING" MEASUREMENTS AS SHOWN HEREON WERE MADE UNDER MY SUPERVISION OR AS NOTED AND ARE CORRECT TO THE BEST OF MY KNOWLEDGE AND BELIEF.

REGISTERED ENGINEER / LAND SURVEYOR _____ DATE _____

REGISTRATION NUMBER _____

APPROVED _____ 7/20/2016
COUNTY ENGINEER DATE

Registered Professional Engineer (Civil)
CERTIFICATE NO. 35571
LINDA A POTTER
Date Signed 7/19/16
ARIZONA U.S.A.
EXPIRES 12-31-2018

	NAME	DATE
DESIGN	LAP	12/2015
DRAWN	GGP	12/2015
CHECKED	LAP	12/2015

ATKINS

COVER SHEET

1

LOCATION: Queen Valley Flood Mitigation Project, Phase II

DRAWING NO: G1

X:\100031696 (Pinal Co Queen Valley)\CADD\Sharon Drive\01_G1_Title Sheet.dwg Layout: Cover Sheet 1 Jul 20, 2016 – 2:48pm

GENERAL NOTES

A. ALL CONSTRUCTION SHALL CONFORM TO THE LATEST REVISIONS OF THE MARICOPA ASSOCIATION OF GOVERNMENTS STANDARD SPECIFICATIONS AND DETAILS (MAG STANDARDS) UNLESS SPECIFICALLY MODIFIED ON THE PLANS.

B. IT SHALL BE THE CONTRACTOR'S RESPONSIBILITY TO OBTAIN COPIES OF APPLICABLE STANDARDS AND SPECIFICATIONS AS WELL AS ALL OTHER STANDARDS AND SPECIFICATIONS NECESSARY TO COMPLETELY AND ACCURATELY INTERPRET THE PLANS.

C. ALL QUANTITIES SHOWN ON PLANS ARE NOT VERIFIED BY THE ENGINEER. THE CONTRACTOR SHALL VERIFY ALL QUANTITIES SHOWN AND MAKE HIS BID BASED UPON THOSE VERIFICATIONS. IF ANY DISCREPANCY IN QUANTITIES IS FOUND, CONTRACTOR SHALL NOTIFY THE ENGINEER OF SUCH NO LATER THAN 24 HOURS PRIOR TO BID OPENING.

D. A PINAL COUNTY PERMIT WILL BE REQUIRED FOR ALL OFF-SITE CONSTRUCTION AND CONSTRUCTION WITHIN THE PUBLIC RIGHT OF WAY, AT NO FEE OR CHARGE.

E. IT IS THE SOLE RESPONSIBILITY OF THE CONTRACTOR TO OBTAIN, AT HIS OWN EXPENSE, SUCH PERMITS AS ARE REQUIRED FROM THE APPROPRIATE AGENCIES.

F. THE PUBLIC WORKS DEPARTMENT SHALL BE NOTIFIED A MINIMUM OF 3 DAYS PRIOR TO BEGINNING ANY CONSTRUCTION IN THE PUBLIC RIGHT OF WAY.

G. INSPECTION IS TO BE DONE BY THE PINAL COUNTY PUBLIC WORKS DEPARTMENT.

H. ANY WORK PERFORMED WITHOUT THE KNOWLEDGE OF THE COUNTY INSPECTOR OR HIS REPRESENTATIVE IS SUBJECT TO REMOVAL AND REPLACEMENT OF SAME, TO BE DONE AT THE CONTRACTOR'S EXPENSE.

I. ALL WORK AND MATERIALS, WHICH DO NOT CONFORM TO THE SPECIFICATIONS, ARE SUBJECT TO REMOVAL AND REPLACEMENT AT THE CONTRACTOR'S EXPENSE.

J. APPROVAL OF A PORTION OF THE WORK IN PROGRESS DOES NOT GUARANTEE ITS FINAL ACCEPTANCE. TESTING AND EVALUATION MAY CONTINUE UNTIL THE WRITTEN FINAL ACCEPTANCE OF A COMPLETE AND WORKABLE UNIT.

K. PINAL COUNTY MAY SUSPEND THE WORK BY WRITTEN NOTICE WHEN, IN ITS JUDGMENT, PROGRESS IS UNSATISFACTORY, WORK BEING DONE IS UNAUTHORIZED OR DEFECTIVE, WEATHER CONDITIONS ARE UNSUITABLE, OR THERE IS A DANGER TO THE PUBLIC HEALTH AND SAFETY.

L. THE CONTRACTOR SHALL PROVIDE SUFFICIENT PERSONNEL AND EQUIPMENT ON THE JOB AT ALL TIMES DURING CONSTRUCTION TO COMPLY WITH SPECIFICATIONS AND TO COMPLETE WORK.

M. CONTRACTOR SHALL BE RESPONSIBLE FOR CONSTRUCTION SURVEYING AND LAYOUT.

N. THE CONTRACTOR SHALL NOTIFY "BLUE STAKE" AT 811 OR 1-800-782-5348 AT LEAST 48 HOURS PRIOR TO CONSTRUCTION.

O. IT IS THE CONTRACTOR'S RESPONSIBILITY TO LOCATE ALL UNDERGROUND PIPELINES, TELEPHONE AND ELECTRIC CONDUITS AND STRUCTURES IN ADVANCE OF ANY CONSTRUCTION AND WILL OBSERVE ALL POSSIBLE PRECAUTIONS TO AVOID ANY DAMAGE TO SUCH. THE ENGINEER AND/OR COUNTY WILL NOT GUARANTEE ANY LOCATIONS AS SHOWN ON THESE PLANS, OR THOSE OMITTED FROM IT.

P. CONTRACTOR IS TO UNCOVER ALL EXISTING LINES BEING TIED INTO AND VERIFY GRADES BEFORE ANY OTHER CONSTRUCTION.

Q. ARIZONA DEPARTMENT OF ENVIRONMENTAL QUALITY REQUIREMENTS SHALL BE COMPLIED WITH.

R. WATER/SEWER SEPARATION SHALL BE PURSUANT TO AAC R-18-4-502C.

S. WATER MAINS SHALL BE SUBJECT TO A PRESSURE AND LEAKAGE TEST IN ACCORDANCE WITH AWWA C-600 STANDARD.

T. WATER MAINS SHALL BE DISINFECTED IN ACCORDANCE WITH ADEQ ENGINEERING BULLETIN NO. 8 "DISINFECTION OF WATER SYSTEMS".

U. OPERATION OF VALVES TO BE DONE BY QUEEN VALLEY WATER DISTRICT PERSONNEL ONLY.

V. DUCTILE IRON PIPE TO BE INSTALLED PER MANUFACTURER'S REQUIREMENTS.

W. ALL MATERIALS FOR WATER LINE CONSTRUCTION SHALL MEET AAC R-18-4-119.

X. CONTRACTOR SHALL WARRANT ALL WORK FOR A MINIMUM OF TWO YEARS AFTER FORMAL ACCEPTANCE OF THE WORK.

Y. FAILURE TO MEET REQUIRED RATES: FAILURE BY THE CONTRACTOR TO TIMELY AND ADEQUATELY RESPOND TO THE COUNTY ENGINEER OR DESIGNATED REPRESENTATIVE'S WEEKLY NOTICE OF PRODUCT REQUIREMENTS SHALL CONSTITUTE A MATERIAL BREACH OF THE CONTRACT, WHEREUPON PINAL COUNTY MAY CANCEL THE CONTRACT AND PURSUE ANY AVAILABLE LEGAL REMEDY TO RECOVER FOR DAMAGES FOLLOWING THAT BREACH

Z. CONSTRUCTION WATER SHALL BE OBTAINED, PROVIDED AND APPLIED WITH SUFFICIENT QUANTITY TO KEEP DUST DOWN AND BRING MATERIAL MOISTURE CONTENT TO OPTIMUM DURING CONSTRUCTION ACTIVITIES.

AA. CONTRACTOR SHALL LIMIT ALL CONSTRUCTION ACTIVITIES TO OCCUR WITHIN EXISTING AND ACQUIRED ROW AND EASEMENTS AS SHOWN ON THE PLANS.

BB. THE CONTRACTOR SHALL FURNISH DRAWINGS/SPECIFICATION SHEETS FOR ALL PRODUCTS PROPOSED FOR THIS PROJECT. NO MATERIALS SHALL BE PURCHASED BY THE CONTRACTOR UNTIL PINAL COUNTY REVIEWS AND APPROVES THE PROPOSED MATERIALS SUBMITTED FOR USE.

CC. WORK IS REQUIRED IN AREAS WHICH ARE UNDER SRP OVERHEAD TRANSMISSION LINES. THE CONTRACTOR IS RESPONSIBLE FOR OBTAINING ANY NECESSARY PERMITS FROM SRP AND COORDINATING ALL WORK WITH SRP. IF SRP REQUIRES A TECHNICAL ELECTRICAL EXPERT TO BE ON SITE DURING WORK IN THE SRP AREA THE CONTRACTOR IS RESPONSIBLE FOR COORDINATING THIS EFFORT AND MAKING PAYMENT TO SRP. PINAL COUNTY IS NOT RESPONSIBLE FOR ANY PAYMENT OF TECHNICAL PERSONNEL REQUIRED TO BE ON-SITE BY SRP.

DD. THE CONTRACTOR SHALL PERFORM WITH ITS OWN WORK FORCES AT LEAST 51% OF THE WORK, UNLESS WRITTEN CONSENT TO SUBCONTRACT A PORTION OF THE WORK IS OBTAINED FROM THE COUNTY ENGINEER.

EE. DO NOT IMPEDE FLOW OF FLOOD WATERS AT ANY TIME. FLOOD WATERS INCLUDE NORMAL FLOWS IN THE WASH THAT MAY OCCUR AT ANY TIME DAMAGE CAUSED BY FLOW OF WATER IS THE CONTRACTORS RESPONSIBILITY.

FF. CONTRACTOR SHALL PROVIDE MATERIAL TESTING PER M.A.G. QUALITY ASSURANCE WILL BE PERFORMED BY PINAL COUNTY

GG. CONTRACTOR SHALL REPLACE ANY TREES (AT THEIR EXPENSE) LOCATED OUTSIDE THE LIMITS OF CONSTRUCTION THAT ARE SUBSTANTIALLY DAMAGE OR REMOVED DURING CONSTRUCTION.

HH. CONTRACTOR SHALL ASSUME SOLE AND COMPLETE RESPONSIBILITY FOR JOB SITE CONDITIONS DURING THE COURSE OF CONSTRUCTION OF THE PROJECT UNTIL WORK IS ACCEPTED BY THE COUNTY. THIS REQUIREMENT SHALL APPLY CONTINUOUSLY AND NOT BE LIMITED TO NORMAL WORKING HOURS. THE CONTRACTORS SHALL DEFEND, INDEMNIFY AND HOLD THE OWNER AND THE ENGINEER HARMLESS FROM ANY AND ALL LIABILITY, REAL OR ALLEGED, IN CONNECTION WITH THE PERFORMANCE OF WORK ON THIS PROJECT EXCEPTING FOR LIABILITY ARISING FROM THE NEGLIGENCE OF THE OWNER OR ENGINEER.

II. THE CONTRACTOR SHALL COMPLY WITH ALL APPLICABLE OCCUPATIONAL SAFETY AND HEALTH ADMINISTRATION (OSHA) REGULATIONS.

JJ. THE CONTRACTOR SHALL TAKE WHATEVER STEPS NECESSARY TO PREVENT AND CONTROL DUST DUE TO CONSTRUCTION OPERATIONS AND SHALL CONTROL DUST AS DIRECTED BY THE OWNER OR INSPECTOR. DUST CONTROL IS CONSIDERED INCIDENTAL TO THE CONTRACT AND NO ADDITIONAL COMPENSATION SHALL BE PERMITTED.

KK. ANY DISTURBANCE BEYOND MARKED LIMITS OF DISTURBANCE IS CONSIDERED AS CONTRACTOR CONVENIENCE AND RESTORATION WILL NOT BE COMPENSATED.

LIST OF ABBREVIATIONS:

ABBREVIATIONS PER ANSI Y1.1

△	ANGLE
AB	AGGREGATE BASE
ABDN	ABANDONED
ACP	ASBESTOS CEMENT PIPE
ADEQ	ARIZONA DEPARTMENT OF ENVIRONMENTAL
ADOT	ARIZONA DEPARTMENT OF TRANSPORTATION
APN	ASSESSOR'S PARCEL NUMBER
APS	ARIZONA PUBLIC SERVICE
AASHTO	AMERICAN ASSOCIATION OF STATE HIGHWAY AND TRANSPORTATION OFFICIALS.
AV	AIR VALVE
BC	BEGIN CURVE
BDRY	BOUNDARY
BLDG	BUILDING
BRG	BEARING
BS	BUCKSKIN SANITARY DISTRICT
BVC	BEGINNING OF VERTICAL CURVE
CF	CUBIC FOOT
CIR	CIRCLE
CL	CENTER LINE
CLR	CLEAR
CLSM	CONTROLLED LOW STRENGTH MATERIAL
CML&TC	CEMENT MORTAR LINED AND TAPE COATED
CMP	CORRUGATED METAL PIPE
CMPA	CORRUGATED METAL PIPE ARCH
CMU	CEMENT MORTAR UNIT
CONC	CONCRETE
CONT	CONTINUOUS
CO	CLEAN OUT
CONN	CONNECTION
COP	CITY OF PRESCOTT
CP	CATHODIC PROTECTION
CPTS	CATHODIC PROTECTION TEST STATION
CTB	CEMENT TREATED BASE
DE	DRAINAGE EASEMENT
DET	DETAIL
DDMMC	DRAINAGE DESIGN MANUAL MARICOPA COUNTY
DI	DUCTILE IRON
DIA	DIAMETER
DR	DIAMETER RATIO, DRIVE, DRAIN
DTL	DETAIL
DWG	DRAWING
DWY	DRIVE WAY
E	EASTING, EAST, ELECTRICAL
EA	EACH
EC	END CURVE
EF	EACH FACE
ELEV	ELEVATION
FG	FINISH GRADE
FH	FIRE HYDRANT
ELEC	ELECTRICAL
EOP	EDGE OF PAVEMENT
ESMT	EASEMENT
EVC	END OF VERTICAL CURVE
EX	EXISTING
EXST	EXISTING
EXIST	EXISTING
EW	EACH WAY
FEN	FENCE
FH	FIRE HYDRANT
FL	FLOW LINE
FLG	FLANGE
FM	FORCE MAIN
FO	FIBER OPTIC
FT	FOOT
G	GAS MAIN
GPM	GALLONS PER MINUTE
HDPE	HIGH DENSITY POLYETHYLENE
HORIZ	HORIZONTAL
HT	HEIGHT
IN	INCH
INV	INVERT
IE	INVERT ELEVATION
IPT	IRON PIPE THREAD
LAT	LATERAL, LATITUDE
LBS	POUNDS
LONG	LONGITUDE
L, LT	LEFT
M	METER
MAG	MARICOPA ASSOCIATION OF GOVERNMENTS
MAR	MANUAL AIR RELEASE
MAX	MAXIMUM
MFR	MANUFACTURER
MH	MANHOLE
MIN	MINIMUM
MJ	MECHANICAL JOINT
N	NORTHING, NORTH
NO. #	NUMBER
O.C.	ON CENTER
OFF	OFFSET
OHCATV	OVERHEAD CABLE/TV
OHE	OVERHEAD ELECTRICAL
OHP	OVERHEAD POWER
PC	POINT OF CURVATURE
PCC	POINT OF COMPOUND CURVATURE
PE	POLYETHYLENE, PLAIN END
PED	PEDESTAL
PERF	PERFORATED
PGL	PROFILE GRADE LINE
PH	POTHOLE
PI	POINT OF INTERCEPT
POC	POINT ON CURVE, POINT OF CONNECTION
PP	POWER POLE
PPLN	PIPELINE
PRC	POINT OF REVERSE CURVE
PRVC	POINT OF REVERSE VERTICAL CURVE
PSF	POUND PER SQUARE FOOT
PT	POINT, POINT OF TANGENT
PVC	POLYVINYL CHLORIDE
PVI	POINT OF VERTICAL INTERSECTION
PVMT	PAVEMENT
R	RADIUS
ROW	RIGHT OF WAY
RSVR	RESERVOIR
RT	RIGHT
S	SEWER, SLOPE, SOUTH
SCHED	SCHEDULE
SD	STORM DRAIN
SDDI	SLOTTED DRAIN INLET
SDMH	STORM DRAIN MANHOLE
SDR	STANDARD DIMENSION RATIO
SECT	SECTION
SF	SQUARE FOOT
SHT	SHEET
SPC	STANDARD SPECIFICATION
SPEC	SPECIFICATIONS
STA	STATION
STD	STANDARD
STL	STEEL
TCE	TEMPORARY CONSTRUCTION EASEMENT
TEL	TELEPHONE
TG	TOP GRATE
TF	TOP FOOTING
THK	THICK
T.O.P.	TOP OF PIPE
TP	TELEPHONE PEDESTAL
TW	TOP OF WALL
TYP	TYPICAL
UGP	UNDER GROUND POWER
UKN	UNKNOWN
V	VALVE
VC	VERTICAL CURVE
VCP	VITRIFIED CLAY PIPE
VERT	VERTICAL
VLT	VAULT
VPI	VERTICAL POINT OF INTERSECTION
W	WATER, WEST
WI	WROUGHT IRON
WM	WATER MAIN
WS	WATER SERVICE
WTR	WATER
WW	WASTE WATER
WWF	WELDED WIRE FABRIC

LEGEND

EXIST POWER POLE
EXIST POST
EXIST UTILITY POLE
EXIST TRAFFIC SIGN
EXIST STREET SIGN
FOUND MONUMENT
EXIST WATER VALVE
EXIST FIRE HYDRANT
EXIST SEWER MANHOLE
EXIST LIGHT POLE
EXIST WATER METER
EXIST FLAG POLE
EXIST TREE
EXIST TREELINE
EXIST PALMTREE
EXIST CACTUS
EXIST GATE
PROPOSED CAP
PROPOSED COMB AV ASSEMBLY
FLOW LINE
PROPOSED WATER METER
PROPOSED STUB OUT
PROPOSED GATE VALVE
PROPOSED BOLLARD
PROPOSED TRAFFIC SIGN
PROPOSED MONUMENT
PROPOSED CONTRACTOR STAGING AREA
PROPOSED RIP RAP
EXISTING RIP RAP TO BE REMOVED & SALVAGED
EXISTING ASPHALT TO BE REMOVED
EXISTING CONCRETE TO BE REMOVED
PROPOSED ASPHALT
PROPOSED WALL APRON
EASEMENT (DE OF TCE)
SECTION NUMBER
SHEET NUMBER

UTILITY LINES:

EXIST 8" SANITARY SEWER
EXIST OVERHEAD ELECTRIC
EXIST WATER
EXIST STORM DRAIN
EXIST SEWER
EXIST GAS
EXIST UNDERGROUND TELEPHONE
EXIST UNDERGROUND CABLE TV
EXIST FIBER OPTICS
EXIST UNDERGROUND ELECTRIC
EXIST FENCE
EXIST MINOR CONTOUR
EXIST MAJOR CONTOUR
EXIST MEDIA COMMUNICATIONS LINE
MINOR CONTOUR
MAJOR CONTOUR
DAYLITE
EXIST ROW
EXIST BOUNDARY LINE
EXIST EASEMENT
EXISTING PIPE CULVERT TO BE REMOVED
ROADWAY CENTERLINE
PROPERTY LINE
ASPHALT SAWCUT LINE
PROPOSED STORM PIPE
PROPOSED FENCE LINE
PROPOSED 6" WATER LINE
LIMITS OF DISTURBANCE

UTILITY INFORMATION

COMPANY	CONTACT	TELEPHONE
CENTURYLINK INC	ELM LOCATING RECALLS AND UNKNOWNS: EAST	(623) 780-3350
MEDIA COM-APACHE JUNCTION	DAVID JOHNSON	(602) 931-8717
QUEEN VALLEY WATER DISTRICT	CECIL FENDLEY	(520) 463-2780
SALT RIVER PROJECT-PINAL COUNTY	SRP BLUE STAKE	(602) 236-8026
QUEEN VALLEY SANITARY DISTRICT	GARY BELVE	(520) 463-2903

BLUE STAKE
CALL TWO WORKING DAYS
BEFORE YOU DIG
1-800-STAKE-IT
outside Maricopa County

CALL TWO WORKING DAYS BEFORE YOU DIG
263-1100
1-800-STAKE-IT
(OUTSIDE MARICOPA COUNTY)

Registered Professional Engineer (Civil) CERTIFICATE NO. 35571 LINDA A POTTER Date Signed 7/11/16 ARIZONA U.S.A.
EXPIRES 12-31-2018

	NAME	DATE
DESIGN	LAP	12/2015
DRAWN	GGP	12/2015
CHECKED	LAP	12/2015

ATKINS

GENERAL NOTES & LEGEND

LOCATION
Queen Valley Flood Mitigation Project, Phase II

2

DRAWING NO: G2

X:\100031696 (Pinal Co Queen Valley)\CADD\Sharon Drive\02-03_G2-G3_General Notes.dwg Layout: G2 Jul 20, 2016 - 2:53pm

BENCHMARK/CONTROL POINTS

NAD83 SPCS CENTRAL ZONE GROUND (INT.FT.) FOR NORTHING & EASTING.
NAVD 88 ADJ. ELEVATION TO PUBL. J107 FOR ELEVATION

#	NORTHING	EASTING	ELEVATION	DESCRIPTION
1	837937.3565	886170.0467	2083.34	SET 60D NAIL FOR BASE STATION
7001	834860.2128	887108.5754	1991.45	PANEL PT 1 SET PK NAIL
7002	836468.2434	887093.0940	2007.85	PANEL PT 2 SET PK NAIL
7003	836460.4422	889496.068	2007.47	PANEL PT 3 FOUND BRASS CAP FLUSH
7004	837029.1325	889385.2828	2006.64	PANEL PT 4 SET 60D NAIL
7005	837146.1427	888861.5415	2025.28	PANEL PT 5 SET 60D NAIL
7006	836435.6214	888683.2428	2001.35	PANEL PT 6 SET PK NAIL
7007	835583.9541	888574.542	2002.36	PANEL PT 7 SET PK NAIL
7008	835664.3396	889619.7412	2037.71	PANEL PT 8 SET PK NAIL
7100	832887.3774	879587.3097	1946.11	NGS CONTROL J 107
7101	824911.2501	897765.9614	2165.71	NGS CONTROL N 107

DATUM

HORIZONTAL DATUM:
COORDINATES ARE BASED ON NAD83 (1992), ARIZONA SPCS, CENTRAL ZONE, INTERNATIONAL FEET AND ARE IN GROUND UNITS.

SCALE FACTOR APPLIED TO GO FROM GROUND TO GRID IS 0.99993691

VERTICAL DATUM:
ALL ELEVATIONS ARE ORTHOMETRIC HEIGHTS DERIVED FROM J 107 AND ARE IN NAVD88 US SURVEY FEET.

BENCHMARK

STATION IS AN NATIONAL GEOTDETIC SURVEY MARKER WITH DESIGNATION – J 107 AND PID DU0483

STATION DESCRIPTION
2.3 MI NW FROM FLORENCE JUNCTION. 2.3 MILES NORTHWEST ALONG U.S. HIGHWAY 60 FROM FLORENCE JUNCTION, PINAL COUNTY, AT THE POINT WHERE A HIGH–VOLTAGE POWERLINE AND THE HIGHWAY CROSS QUEEN CREEK, AT A CONCRETE BRIDGE AND IN THE TOP OF THE EAST WING WALL OF THE NORTH ABUTMENT. STATION IS A STANDARD DISK STAMPED J 107 1935. NOTE–– OLD U.S. HIGHWAY 60 STILL HAS USAGE.

TO REACH THE MARK FROM FLORENCE JUNCTION, GO WEST ON U.S. HWY. 60 FOR 0.15 MILE TO A PAVED ROAD RIGHT, TURN RIGHT AND GO NORTH FOR 2.15 MILES TO THE QUEEN CREEK BRIDGE AND THE STATION IN THE NORTHWEST CORNER.

ELEVATION = 1946.10 (NAVD88)

BASIS OF BEARING

THE BASIS OF BEARING IS BASED ON NAD83 (1992) ARIZONA STATE PLANE COORDINATE SYSTEM, CENTRAL ZONE, INTERNATIONAL FEET AND RELATIVE TO WGS84 GEODETIC AZIMUTHS. THE CONTROL ESTABLISHED FOR THIS PROJECT WAS CONSTRAINED TO FOUR NGS CORS STATIONS; AZCL, AZGB, AZKR & AZUP. ONE CONTROL POINT LOCAL TO THE PROJECT SITE WAS SET CALLED POINT 1. POINT 1 WAS OBSERVED USING STATIC GPS COLLECTING AT A 15 SECOND EPOCH RATE FOR 5 HOURS. SAID DATA WAS THEN POST PROCESSED WITH THE FOUR NGS CORS STATIONS MENTIONED HEREIN. ALL OTHER CONTROL POINTS, BENCHMARKS AND TEMPORARY BENCHMARKS WERE OBSERVED USING RTK PROCEDURES.

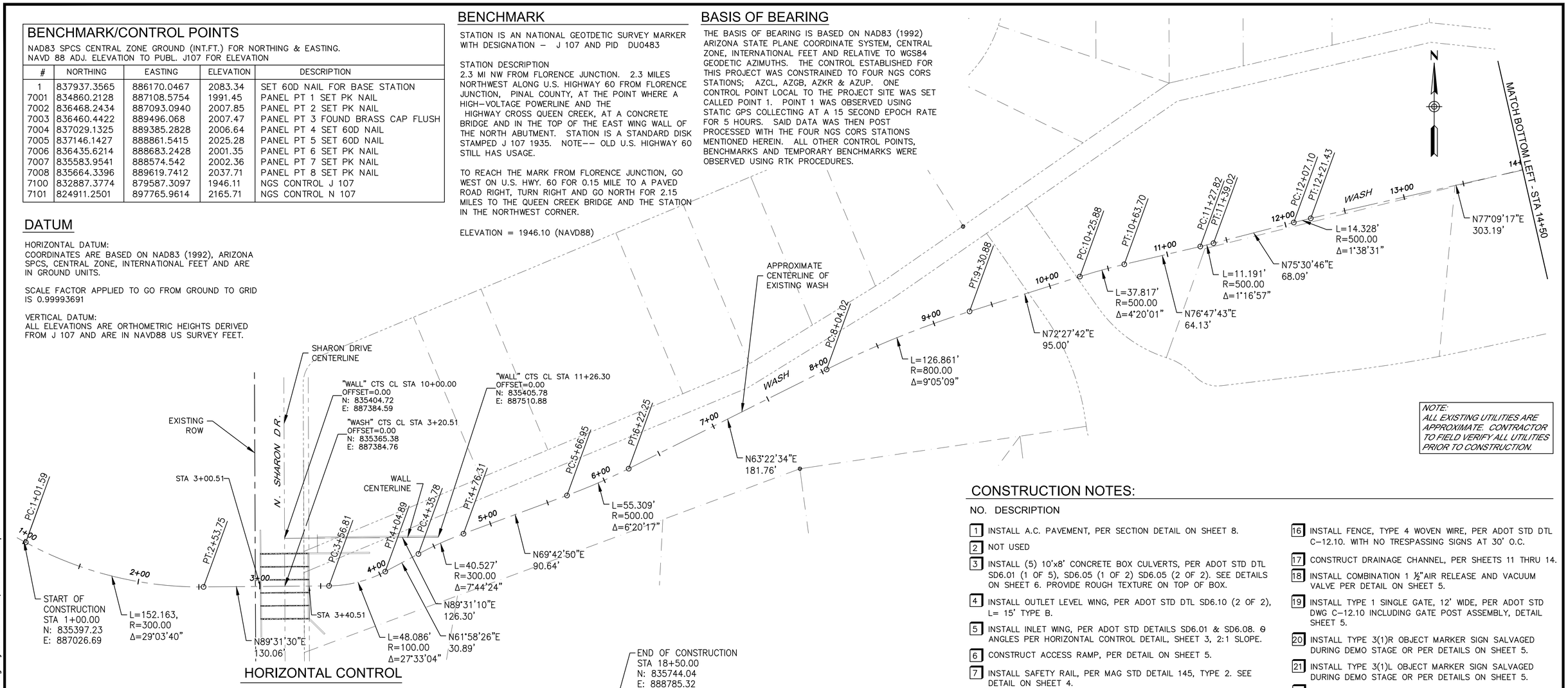

HORIZONTAL CONTROL

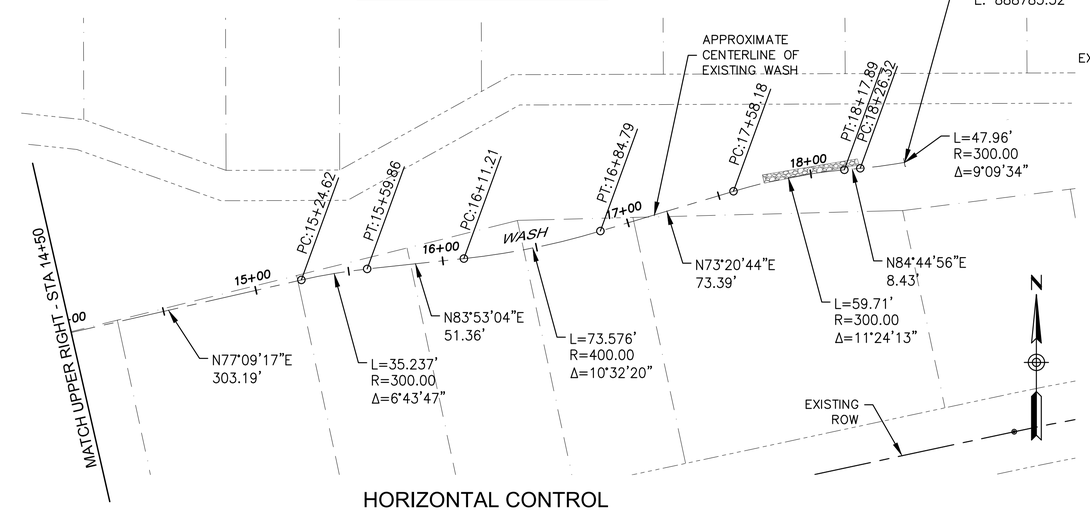

HORIZONTAL CONTROL

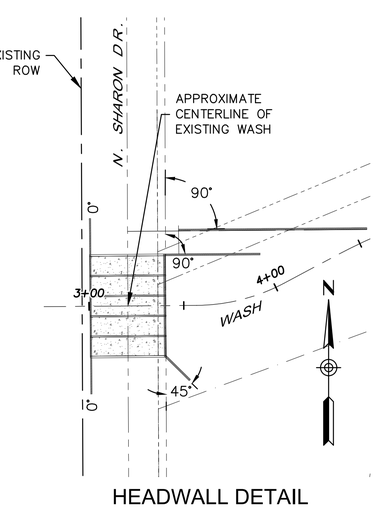

HEADWALL DETAIL

NOTE:
ALL EXISTING UTILITIES ARE APPROXIMATE. CONTRACTOR TO FIELD VERIFY ALL UTILITIES PRIOR TO CONSTRUCTION.

CONSTRUCTION NOTES:

NO. DESCRIPTION

1. INSTALL A.C. PAVEMENT, PER SECTION DETAIL ON SHEET 8.
2. NOT USED
3. INSTALL (5) 10'x8' CONCRETE BOX CULVERTS, PER ADOT STD DTL SD6.01 (1 OF 5), SD6.05 (1 OF 2) SD6.05 (2 OF 2). SEE DETAILS ON SHEET 6. PROVIDE ROUGH TEXTURE ON TOP OF BOX.
4. INSTALL OUTLET LEVEL WING, PER ADOT STD DTL SD6.10 (2 OF 2), L= 15' TYPE B.
5. INSTALL INLET WING, PER ADOT STD DETAILS SD6.01 & SD6.08. Θ ANGLES PER HORIZONTAL CONTROL DETAIL, SHEET 3, 2:1 SLOPE.
6. CONSTRUCT ACCESS RAMP, PER DETAIL ON SHEET 5.
7. INSTALL SAFETY RAIL, PER MAG STD DETAIL 145, TYPE 2. SEE DETAIL ON SHEET 4.
8. INSTALL TOE RIP RAP D50= 18", PER DETAIL ON SHEET 8.
9. INSTALL GROUTED RIP RAP D50=12", PER DETAIL ON SHEET 8.
10. EXISTING WATERLINE TO BE REMOVED AND REPLACED, PER DETAILS ON SHEETS 18.
11. INSTALL GATE VALVE W/ BOX & COVER, PER MAG STD DTL 391 AND THRUST BLOCK PER MAG STD DETAIL 301. DIAMETER TO MATCH PIPE SIZE.
12. PROTECT EXISTING TREE IN PLACE.
13. PROTECT POWER POLE AND GUY WIRE IN PLACE.
14. PROTECT EXISTING 8" VCP SANITARY SEWER IN PLACE.
15. REMOVE AND REPLACE FENCE IN KIND.
16. INSTALL FENCE, TYPE 4 WOVEN WIRE, PER ADOT STD DTL C–12.10. WITH NO TRESPASSING SIGNS AT 30' O.C.
17. CONSTRUCT DRAINAGE CHANNEL, PER SHEETS 11 THRU 14.
18. INSTALL COMBINATION 1 ½"AIR RELEASE AND VACUUM VALVE PER DETAIL ON SHEET 5.
19. INSTALL TYPE 1 SINGLE GATE, 12' WIDE, PER ADOT STD DWG C–12.10 INCLUDING GATE POST ASSEMBLY, DETAIL SHEET 5.
20. INSTALL TYPE 3(1)R OBJECT MARKER SIGN SALVAGED DURING DEMO STAGE OR PER DETAILS ON SHEET 5.
21. INSTALL TYPE 3(1)L OBJECT MARKER SIGN SALVAGED DURING DEMO STAGE OR PER DETAILS ON SHEET 5.
22. INSTALL WATER LINE ENCASEMENT, PER DETAIL SHEET 8.
23. INSTALL 6" DUCTILE IRON WATERLINE PIPE WITH MECHANICAL JOINTS AND REMOVE EXISTING UNUSED PIPE.
24. INSTALL 6" DUCTILE IRON BEND WITH MECHANICAL JOINTS.
25. CONNECT TO EXISTING WATER MAIN.
26. INSTALL RETAINING WALL, PER ADOT STD DTLS SD7.01 CASE 1, HEIGHT PER WALL ELEVATION DETAIL, SHEET 5.
27. INSTALL INLET WING, PER ADOT STD DTL SD6.08 MODIFIED ANGLE PER HORIZONTAL CONTROL SHEET 3, AND MODIFIED DIMENSIONS PER DETAIL SHEET 5.
28. INSTALL 6" PVC TELECOMM CASING PER DETAILS, SHEET 18.

Registered Professional Engineer (Civil) CERTIFICATE NO. 35571 LINDA A POTTER Date Signed 12/21/15 ARIZONA U.S.A.
EXPIRES 12-31-2018

	NAME	DATE
DESIGN	LAP	12/2015
DRAWN	GGP	12/2015
CHECKED	LAP	12/2015

ATKINS

GENERAL NOTES & LEGEND

LOCATION
Queen Valley Flood Mitigation Project, Phase II

3

DRAWING NO: G3

X:\100031696 (Pinal Co Queen Valley)\CADD\Sharon Drive\02-03_G2-G3_General Notes.dwg Layout: G3 Jul 20, 2016 - 2:55pm

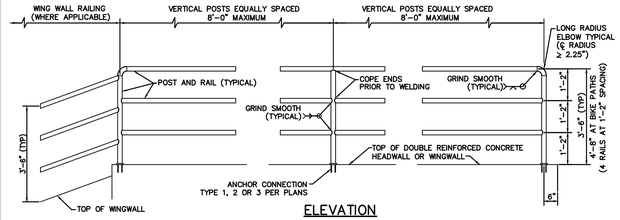

ELEVATION

NOTES:

1. POSTS AND RAILS SHALL BE 1.5" SCHEDULE 40 HOT-DIPPED GALVANIZED STEEL PIPE ASTM A 53, GRADE B (2.72 #/LF, 1.9" O.D.). GALVANIZING SHALL BE IN ACCORDANCE WITH SECTION 771.
2. PAINT RAIL PER MAG SPECIFICATIONS SECTION 530 WHEN REQUIRED BY PLANS. SHOP PRIME WITH RUST INHIBITING PRIMER (FIELD REPAIR PRIMER AS NEEDED). COLOR PER PLANS.
3. VERTICAL POSTS TO BE EVENLY SPACED.
4. REMOVE ALL SHARP EDGES.
5. INSTALL SAFETY RAIL AS REQUIRED BY PLANS OR SPECIFICATIONS.
6. THE EMBEDMENT FOR ANCHOR TYPES 1, 2 AND 3 SHALL BE LOCATED INSIDE THE WALL REINFORCEMENT CAGE.
7. SAFETY RAIL IS NOT TO BE USED AS A PEDESTRIAN BRIDGE RAIL.

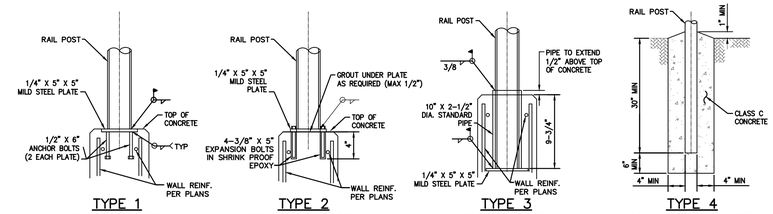

TYPE 1
ANCHOR PLATE DETAIL

TYPE 2
EXPANSION BOLT DETAIL

TYPE 3
PIPE SLEEVE DETAIL

TYPE 4
GROUND INSTALLATION DETAIL

NOTE: SEE PLANS FOR ANCHORAGE DETAILS FOR ATTACHMENT TO SINGULARLY REINFORCED AND NON-REINFORCED WALLS.

DETAIL NO.	STANDARD DETAIL		REVISED	DETAIL NO.
145	MARICOPA ASSOCIATION of GOVERNMENTS ENGLISH	SAFETY RAIL	01-01-2011	145

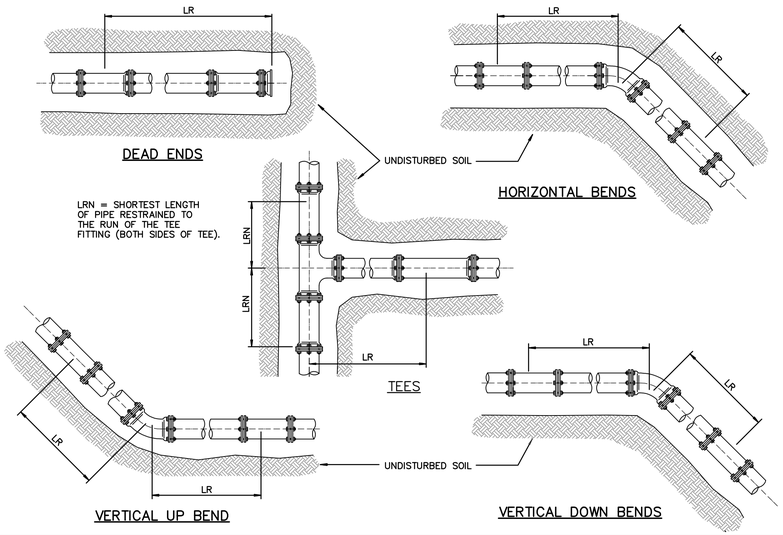

DETAIL NO.	STANDARD DETAIL		REVISED	DETAIL NO.
303-1	MARICOPA ASSOCIATION of GOVERNMENTS ENGLISH	JOINT RESTRAINT FOR DUCTILE IRON AND POLYETHYLENE WRAPPED DUCTILE IRON WATER PIPES	01-01-1998	303-1

RESTRAINED LENGTHS, LR, FOR DUCTILE IRON PIPE

NOMINAL PIPE SIZE INCHES	HORIZONTAL BENDS			TEES		VERTICAL OFFSETS						DEAD ENDS
						90° BEND FITTINGS		45° BEND FITTINGS		22-1/2° BEND FITTINGS		
	90°	45°	22-1/2°	LRN=0'	LRN=10'	DOWN BEND	UP BEND	DOWN BEND	UP BEND	DOWN BEND	UP BEND	
4	18	7	4	30	8	31	18	13	7	6	3	31
6	25	10	5	43	20	44	25	18	10	9	5	44
8	32	13	6	56	34	58	32	24	13	11	6	58
10	38	16	8	68	45	69	38	29	16	14	8	69
12	45	19	9	80	57	81	45	34	19	16	9	81
14	51	21	10	91	68	92	51	38	21	18	10	92
16	57	24	11	103	79	104	57	43	24	21	11	104
18	62	26	12	113	90	115	62	48	26	23	12	115
20	68	28	14	125	100	126	68	52	28	25	14	126
24	79	33	16	145	121	147	79	61	33	29	16	147

RESTRAINED LENGTHS, LR, FOR DUCTILE IRON PIPE WITH POLYETHYLENE WRAP

NOMINAL PIPE SIZE INCHES	HORIZONTAL BENDS			TEES		VERTICAL OFFSETS						DEAD ENDS
						90° BEND FITTINGS		45° BEND FITTINGS		22-1/2° BEND FITTINGS		
	90°	45°	22-1/2°	LRN=0'	LRN=10'	DOWN BEND	UP BEND	DOWN BEND	UP BEND	DOWN BEND	UP BEND	
4	26	11	5	69	18	72	26	30	11	14	5	72
6	36	15	7	99	47	102	36	42	15	20	7	102
8	47	19	9	130	78	133	47	55	19	26	9	133
10	56	23	11	157	103	159	56	66	23	32	11	159
12	65	27	13	185	131	187	65	77	27	37	13	187
14	74	31	15	211	156	214	74	89	31	42	15	214
16	82	34	16	238	183	241	82	100	34	48	16	241
18	90	37	18	263	207	266	90	110	38	53	18	266
20	98	41	20	289	233	292	98	121	41	58	20	292
24	113	47	22	337	280	340	113	141	47	68	22	340

NOTES:

1. ALL JOINTS WITHIN THE SPECIFIED LENGTH LR MUST BE RESTRAINED. ALL LENGTHS ARE GIVEN IN FEET.
2. THE MAXIMUM TEST PRESSURE SHALL NOT EXCEED 200 PSI
3. THE MINIMUM DEPTH OF BURY SHALL BE 3' TO TOP OF PIPE.
4. RESTRAINED LENGTHS MAY BE REDUCED WHEN SUPPORTED BY ENGINEERING CALCULATIONS.

DETAIL NO.	STANDARD DETAIL		REVISED	DETAIL NO.
303-2	MARICOPA ASSOCIATION of GOVERNMENTS ENGLISH	JOINT RESTRAINT FOR DUCTILE IRON AND POLYETHYLENE WRAPPED DUCTILE IRON WATER PIPES	01-01-1998	303-2

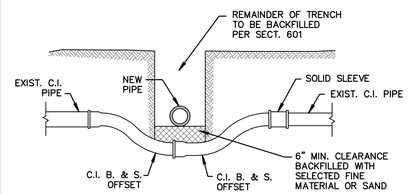

CAST IRON

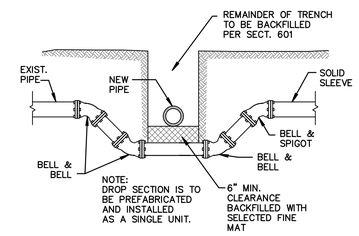

CAST IRON MECHANICAL JOIN

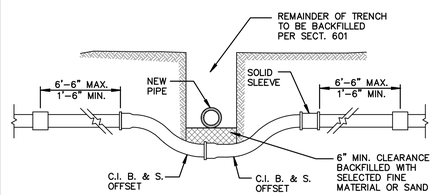

ASBESTOS CEMENT

NOTES:

1. THIS DETAIL COVERS MOVING OF WATER MAINS 2" TO 12" ONLY.
2. THRUST BLOCKING AS PER DET. 380 & 381.
3. IF OFFSET IS TO GO OVER OBSTRUCTION, JOINT RESTRAINTS MUST BE USED.
4. PIPE IS TO BE CAST IRON OR DUCTILE IRON.

DETAIL NO.	STANDARD DETAIL		REVISED	DETAIL NO.
370	MARICOPA ASSOCIATION of GOVERNMENTS ENGLISH	VERTICAL REALIGNMENT OF WATER MAINS	01-01-1998	370

PIPE SIZE	MIN BAR SIZE	"A"-DIMENSION HOOK	MIN. * BLOCK DIM.
6"	#6	6"	3' x 3' x 3'
8"	#6	9"	4' x 4' x 2.5'
12"	#8	9"	4' x 4' x 5'

* FOR 125 P.S.I. WORKING PRESSURE.

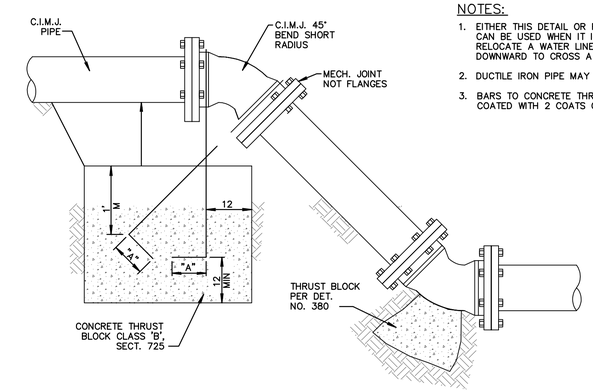

NOTES:

1. EITHER THIS DETAIL OR RESTRAINT RODS CAN BE USED WHEN IT IS ALLOWED TO RELOCATE A WATER LINE UPWARD OR DOWNWARD TO CROSS A CONFLICT.
2. DUCTILE IRON PIPE MAY BE USED.
3. BARS TO CONCRETE THRUST BLOCK TO BE COATED WITH 2 COATS COAL TAR, EPOXY OR

DETAIL NO.	STANDARD DETAIL		REVISED	DETAIL NO.
381	MARICOPA ASSOCIATION of GOVERNMENTS ENGLISH	ANCHOR BLOCKS FOR VERTICAL BENDS	01-01-1998	381

Registered Professional Engineer (Civil) CERTIFICATE NO. 35571 LINDA A POTTER Date Signed 7/1/16 ARIZONA U.S.A.

EXPIRES 12-31-2018

	NAME	DATE
DESIGN	LAP	12/2015
DRAWN	GGP	12/2015
CHECKED	LAP	12/2015

ATKINS

STANDARD DETAILS

LOCATION

Queen Valley Flood Mitigation Project, Phase II

4

DRAWING NO: G4

X:\100031696 (Pinal Co Queen Valley)\CADD\Sharon Drive\04_07_G04-G07_Standard Details 5-18-16.dwg Layout: G4 Jul 20, 2016 - 2:59pm

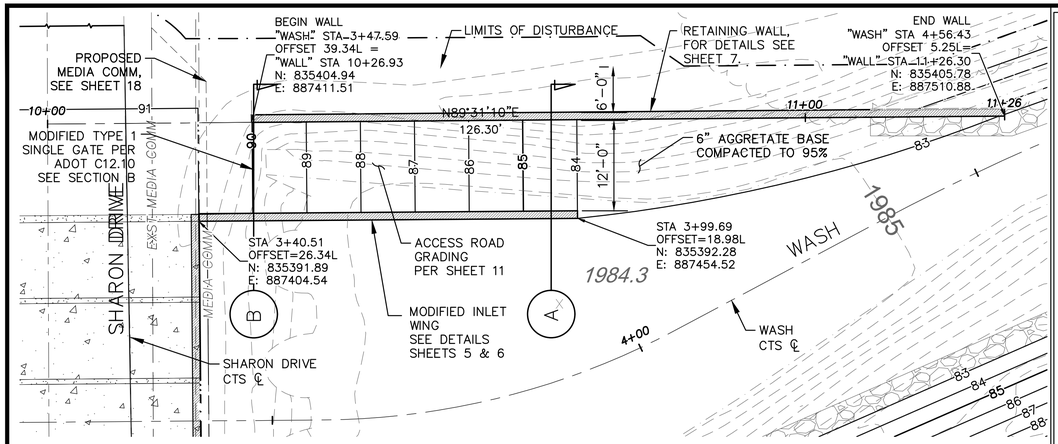

ACCESS ROAD ENLARGED PLAN VIEW

SCALE 1"=10'

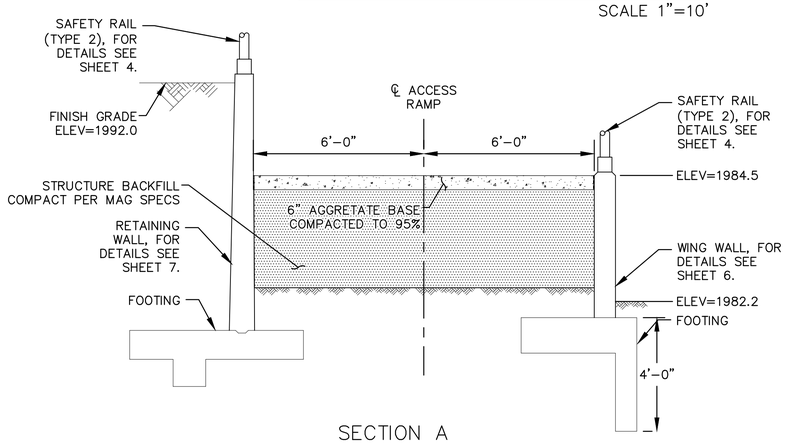

SECTION A

NTS

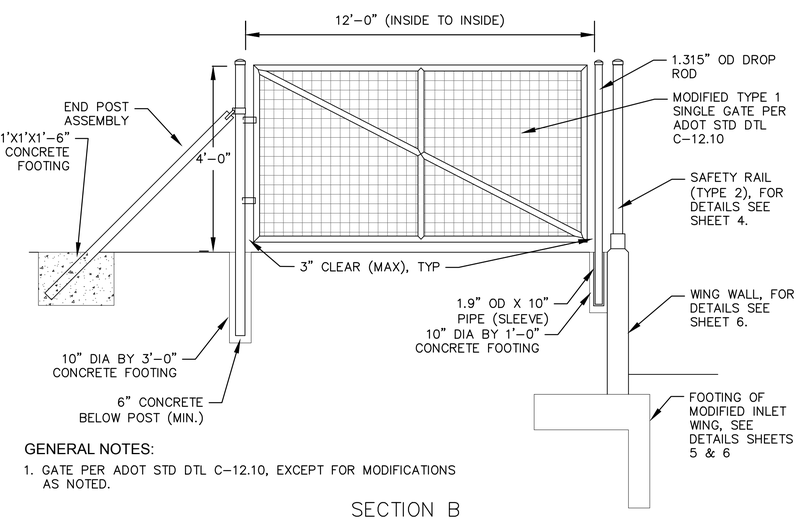

GENERAL NOTES:

1. GATE PER ADOT STD DTL C-12.10, EXCEPT FOR MODIFICATIONS AS NOTED.

SECTION B

NTS

NOTE:

1. TYPE 3 OBJECT MARKERS SHALL BE REFLECTORIZED WITH YELLOW REFLECTIVE SHEETING,

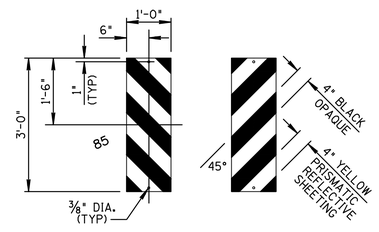

TYPE 3(1)L TYPE 3(1)R

ATTENUATOR OBJECT MARKER DETAILS

DESIGN APPROVED	ARIZONA DEPARTMENT OF TRANSPORTATION INTERMODAL TRANSPORTATION DIVISION STANDARD DRAWINGS	REV. 12/08
APPROVED FOR DISTRIBUTION SIGNATURE ON FILE	OBJECT MARKER DETAILS	DRAWING NO. M-23

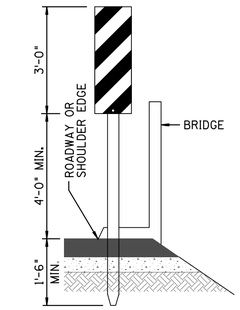

TYPE 3(1)R OBJECT MARKER

NOTE:

1. THE TYPE 3(1) OBJECT MARKER SHALL BE USED TO MARK THE ENDS OF OBSTRUCTIONS SUCH AS NARROW BRIDGES AND CULVERT HEADWALLS. THE MARKER SHALL BE PLACED ON EACH SIDE OF BOTH ENDS OF NARROW BRIDGES AND CULVERT HEADWALLS ON TWO-WAY ROADWAYS AND ONE-WAY ROADWAYS. THE INSIDE EDGE OF THE MARKER SHALL BE IN LINE WITH THE INSIDE EDGE OF THE OBSTRUCTION. R AND L TYPE MARKERS SHALL BE USED ON THE RIGHT AND LEFT SIDE OF TIIE ROADWAY RESPECTIVELY

DESIGN APPROVED	ARIZONA DEPARTMENT OF TRANSPORTATION INTERMODAL TRANSPORTATION DIVISION STANDARD DRAWINGS	REV. 5/03
APPROVED FOR DISTRIBUTION SIGNATURE ON FILE	OBJECT MARKER PLACEMENT DETAILS	DRAWING NO. M-24

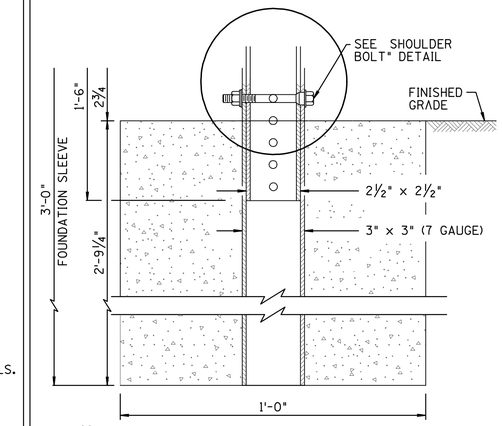

2½" SINGLE POST CONCRETE FOUNDATION DETAIL

DESIGN APPROVED	ARIZONA DEPARTMENT OF TRANSPORTATION INTERMODAL TRANSPORTATION DIVISION STANDARD DRAWINGS	REV. 5/06
APPROVED FOR DISTRIBUTION SIGNATURE ON FILE	PERFORATED SIGN POST FOUNDATION	DRAWING NO. S-1

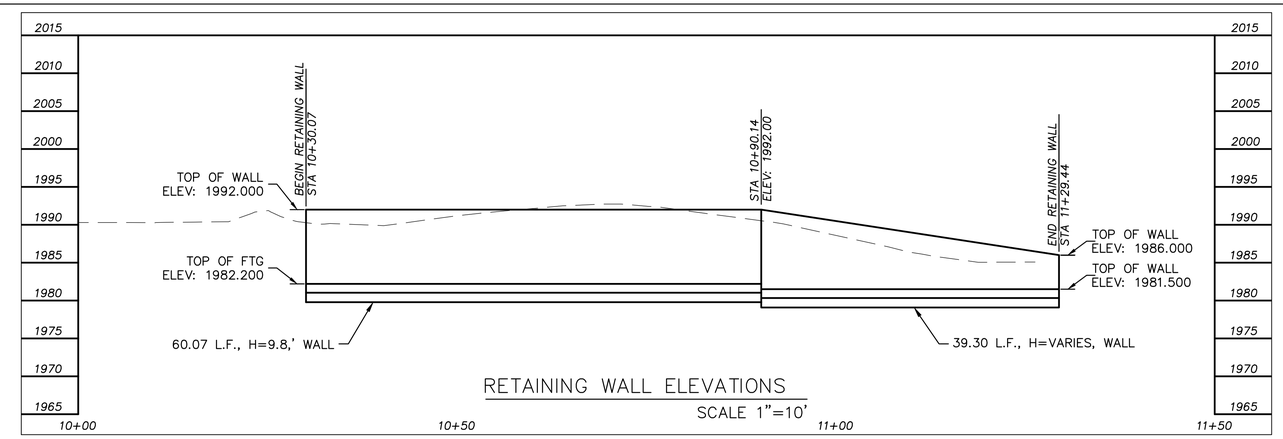

RETAINING WALL ELEVATIONS

SCALE 1"=10'

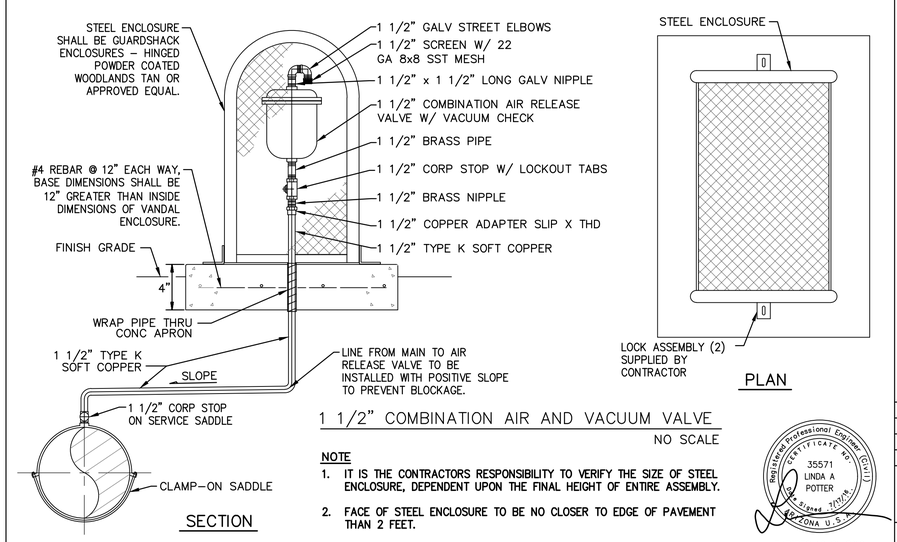

SECTION

PLAN

1 1/2" COMBINATION AIR AND VACUUM VALVE

NO SCALE

NOTE

1. IT IS THE CONTRACTORS RESPONSIBILITY TO VERIFY THE SIZE OF STEEL ENCLOSURE, DEPENDENT UPON THE FINAL HEIGHT OF ENTIRE ASSEMBLY.
2. FACE OF STEEL ENCLOSURE TO BE NO CLOSER TO EDGE OF PAVEMENT THAN 2 FEET.

Registered Professional Engineer (Civil) CERTIFICATE NO. 35571 LINDA A POTTER Date Signed 7/01/16 ARIZONA U.S.A.

EXPIRES 12-31-2018

GENERAL NOTES:

1. ADOT STD DTL SD6.08, EXCEPT FOR MODIFICATIONS AS NOTED.
2. 0 ANGLE PER HORIZONTAL CONTROL SHEET, SHEET 3

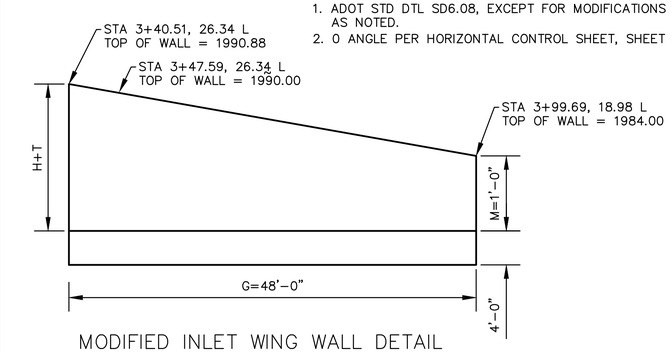

MODIFIED INLET WING WALL DETAIL

NTS

	NAME	DATE
DESIGN	LAP	12/2015
DRAWN	GGP	12/2015
CHECKED	LAP	12/2015

ATKINS

STANDARD DETAILS

5

LOCATION

Queen Valley Flood Mitigation Project, Phase II

DRAWING NO: G5

X:\100031696 (Pinal Co Queen Valley)\CADD\Sharon Drive\04_07_G04-G07_Standard Details 5-18-16.dwg Layout: G5 Jul 20, 2016 - 3:12pm

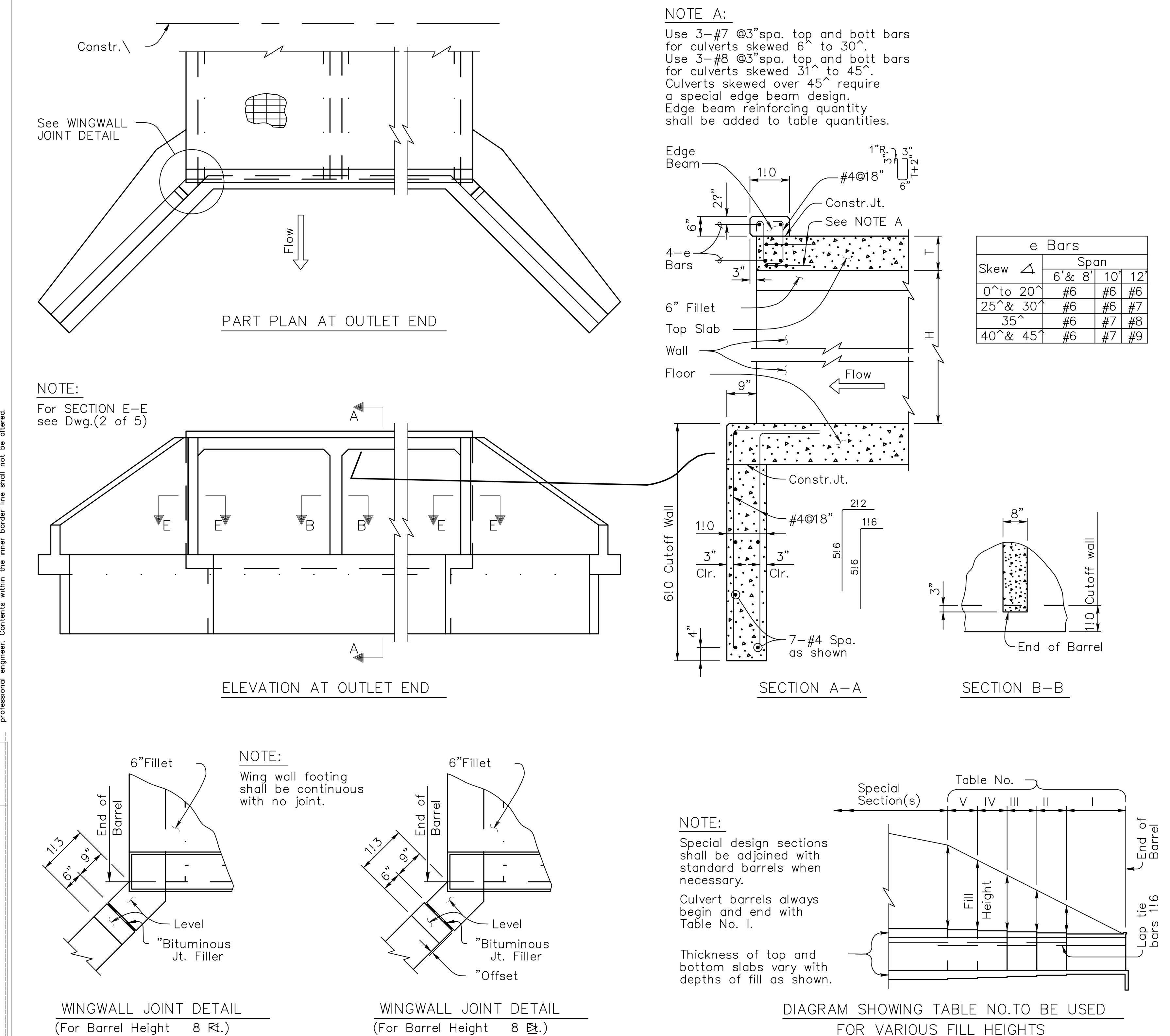

NOTE A:

Use 3–#7 @3"spa. top and bott bars for culverts skewed 6^ to 30^.
Use 3–#8 @3"spa. top and bott bars for culverts skewed 31^ to 45^.
Culverts skewed over 45^ require a special edge beam design.
Edge beam reinforcing quantity shall be added to table quantities.

GENERAL NOTES:

Construction Specification – Arizona Department of Transportation Standard Specifications for Road and Bridge Construction, latest Edition.

Design Specifications – AASHTO LRFD Bridge Design Specifications, 7th Edition 2014.

Loading Class – HL–93.

Design:
Soil weight = 120 p.c.f.

All Concrete shall be Class "S" (f'c = 3000 psi).

Reinforcing steel shall conform to ASTM Specification A615. All reinforcing shall be furnished as Grade 60.

All bends and hooks shall meet the requirements of AASHTO LRFD Article 5.10. All bend dimensions for reinforcing steel shall be out–to–out of bars. All placement dimensions for reinforcing steel shall be to center of bars unless noted otherwise.

All reinforcing steel shall have 2" clear cover unless noted otherwise.

Chamfer all exposed corners ƒ"unless noted otherwise.

Compact backfill for footing and wing base minimum 100 percent of ASTM D698 maximum dry density.

All structures shall have formed Construction joints in the top slab and walls (optional in floor slab) and spaced not more than 38!6" apart or as shown in Project Plans. Joints shall be perpendicular to the centerline of the box. Reinforcing steel shall project 1!6 thru the joint. The joint shall be made with a ," plywood bulkhead which shall be left in place or the alternate joint detail shown on Dwg.(2 of 5) may be used.

See Project Plans for culvert layout, invert elevations, finished grade elevations, headwall, apron, and other site specific details.

Dimensions shall not be scaled from drawings.

Pay item quantities of concrete and reinforcing steel include all labor and materials for box culvert, footing, headwalls, and aprons.
Total Quantities include Barrel and Headwall Quantities shown in Tables (plus added quantity for apron when used). Barrel Quantities Table is per linear foot of box (multiply by length of box to obtain barrel total). Headwall Quantities Table includes wings, edge beam, and cutoff wall.

Culverts measuring 20 ft and greater to the inside faces of exterior walls, along the roadway centerline, shall be assigned a structure number. The structure number shall be referenced in the culvert summary sheet and drainage details.

NOTE:

For Dimensions, Quantities and additional Details, see SD 6.01 (2 to 5).

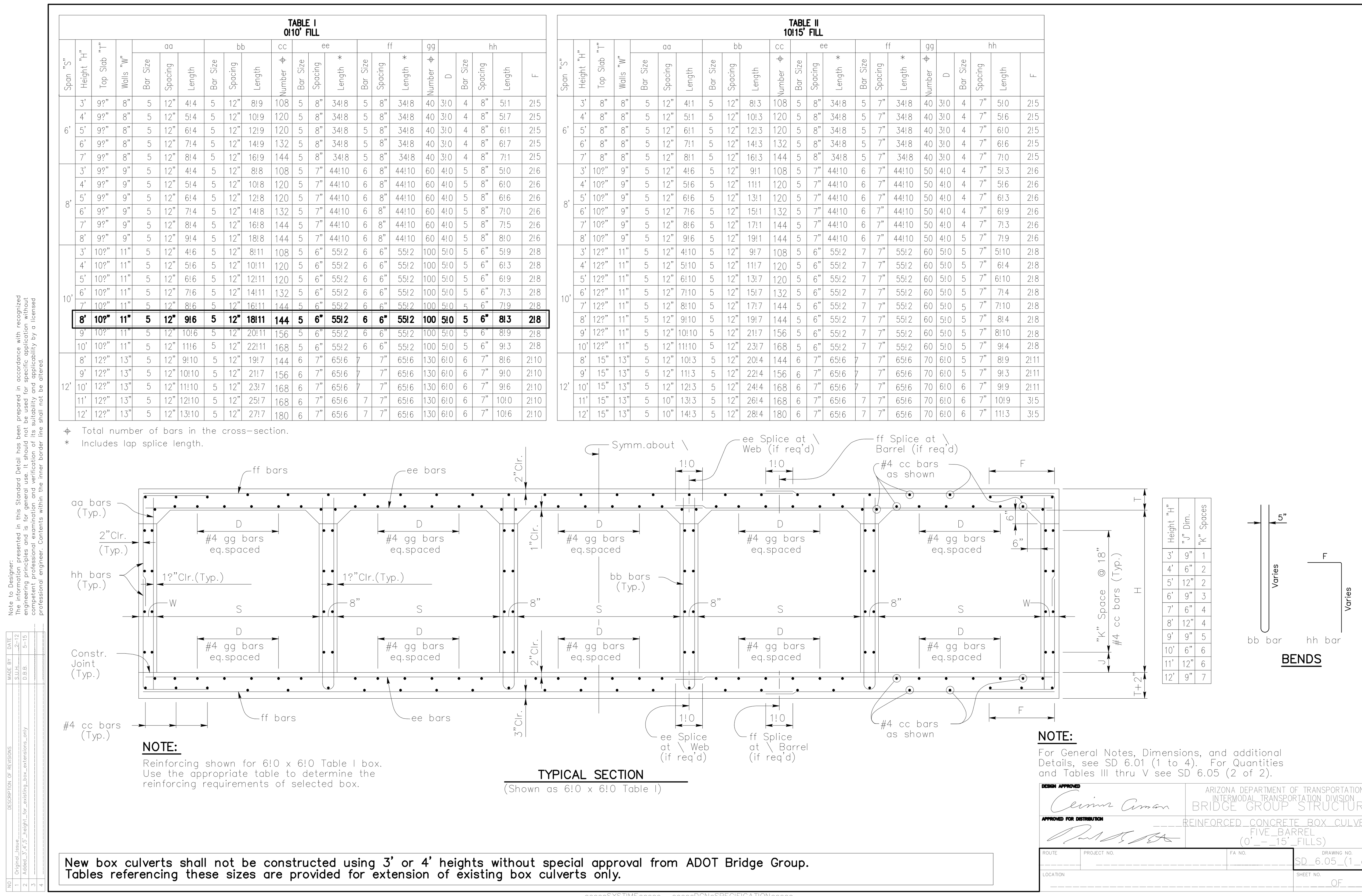

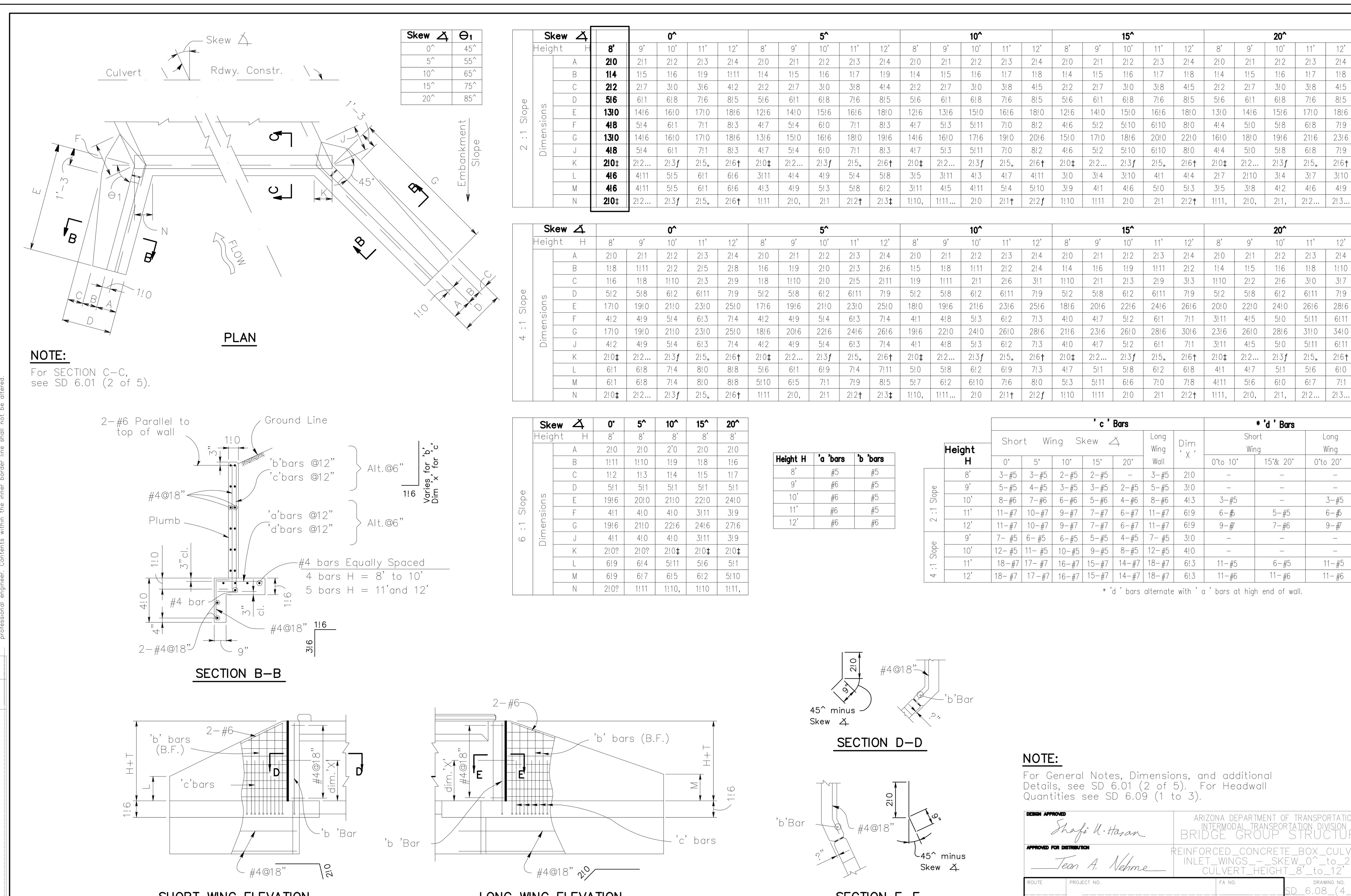

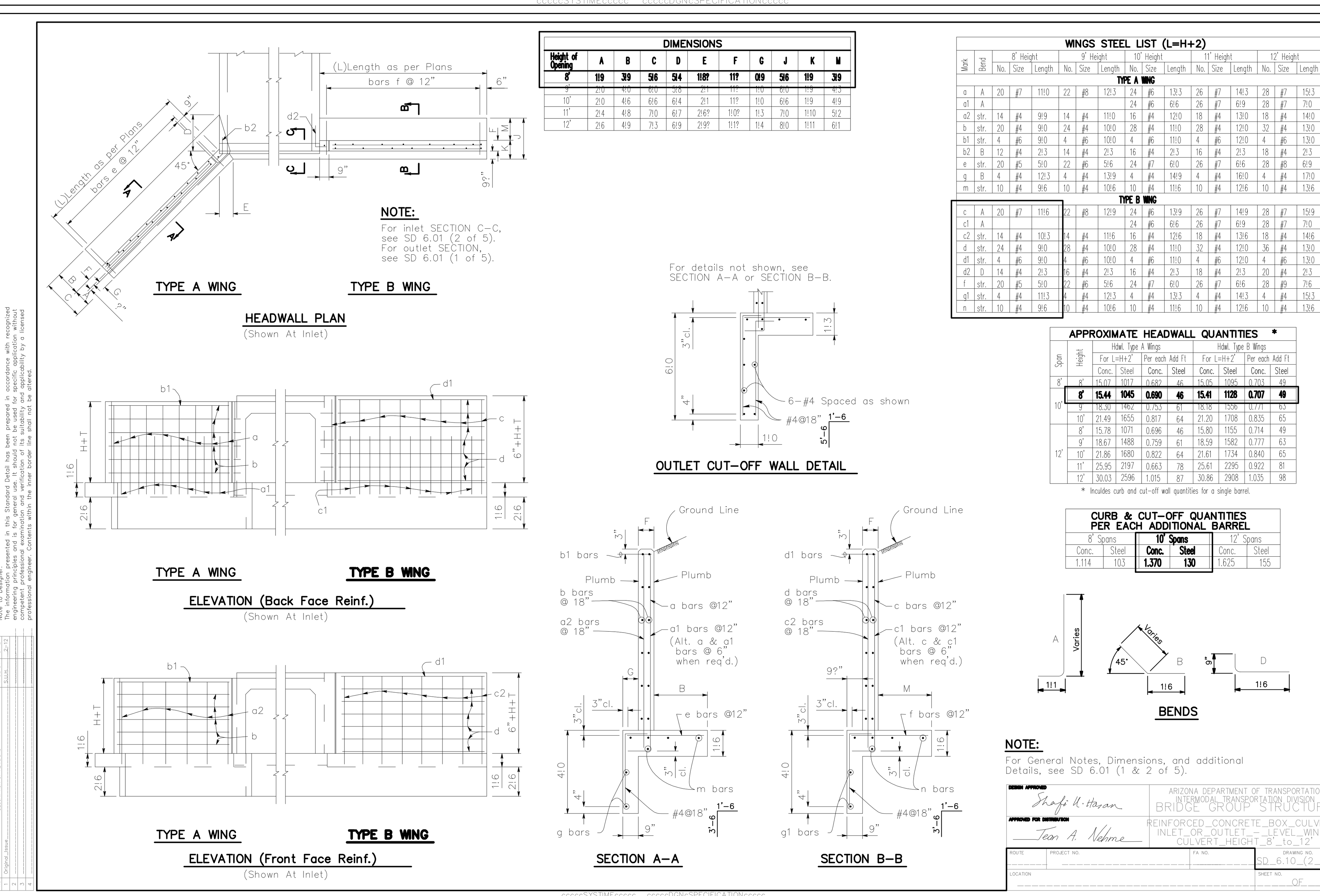

NOTE:
FOR DETAIL SD_6.08_(7 OF 8) USE WALLWING AT 90° TO HEADWALL, EACH SIDE AS SHOWN ON HEADWALL DETAIL ON SHEET 3.

Registered Professional Engineer (Civil) 35571 LINDA A POTTER, ARIZONA U.S.A.
EXPIRES 12-31-2018

	NAME	DATE
DESIGN	LAP	12/2015
DRAWN	GGP	12/2015
CHECKED	LAP	12/2015

ATKINS

STANDARD DETAILS

LOCATION

Queen Valley Flood Mitigation Project, Phase II

6

DRAWING NO: G6

X:\100031696 (Pinal Co Queen Valley)\CADD\Sharon Drive\04_07_G04-G07_Standard Details 5-18-16.dwg Layout: G6 Jul 20, 2016 – 3:13pm

X:\100031696 (Pinal Co Queen Valley)\CADD\Sharon Drive\04_07_G04-G07_Standard Details 5-18-16.dwg Layout: G7 Jul 20, 2016 - 3:13pm

TABLE NO. III — 15!20' FILL

Span "S"	Height "H"	Top Slab "T"	Walls "W"	aa Bar Size	aa Spacing	aa Length	bb Bar Size	bb Spacing	bb Length	cc Number ⌖	ee Bar Size	ee Spacing	ee Length *	ff Bar Size	ff Spacing	ff Length *	gg Number ⌖	gg D	hh Bar Size	hh Spacing	hh Length	F
6'	3'	9?"	8"	5	12"	4!4	5	12"	8!9	108	5	7"	34!8	5	7"	34!8	40	3!0	4	7"	5!1	2!5
	4'	9?"	8"	5	12"	5!4	5	12"	10!9	120	5	7"	34!8	5	7"	34!8	40	3!0	4	7"	5!7	2!5
	5'	9?"	8"	5	12"	6!4	5	12"	12!9	120	5	7"	34!8	5	7"	34!8	40	3!0	4	7"	6!1	2!5
	6'	9?"	8"	5	12"	7!4	5	12"	14!9	132	5	7"	34!8	5	7"	34!8	40	3!0	4	7"	6!7	2!5
	7'	9?"	8"	5	10"	8!4	5	12"	16!9	144	5	7"	34!8	5	6"	34!8	40	3!0	4	6"	7!1	2!5
8'	3'	12"	9"	5	12"	4!9	5	12"	9!7	108	5	7"	44!10	6	7"	44!10	50	4!0	4	7"	5!5	2!6
	4'	12"	9"	5	12"	5!9	5	12"	11!7	120	5	7"	44!10	6	7"	44!10	50	4!0	4	7"	5!11	2!6
	5'	12"	9"	5	12"	6!9	5	12"	13!7	120	5	7"	44!10	6	7"	44!10	50	4!0	4	7"	6!5	2!6
	6'	12"	9"	5	12"	7!9	5	12"	15!7	132	5	7"	44!10	6	7"	44!10	50	4!0	4	7"	6!11	2!6
	7'	12"	9"	5	12"	8!9	5	12"	17!7	144	5	7"	44!10	6	7"	44!10	50	4!0	5	7"	7!5	2!6
	8'	12"	9"	5	10"	9!9	5	12"	19!7	144	5	7"	44!10	6	7"	44!10	50	4!0	5	7"	7!11	2!6
10'	3'	15"	11"	5	12"	5!3	5	12"	10!5	108	6	8"	55!2	7	7"	55!2	60	5!0	5	7"	6!0	2!8
	4'	15"	11"	5	12"	6!3	5	12"	12!5	120	6	8"	55!2	7	7"	55!2	60	5!0	5	7"	6!6	2!8
	5'	15"	11"	5	12"	7!3	5	12"	14!5	120	6	8"	55!2	7	7"	55!2	60	5!0	5	7"	7!0	2!8
	6'	15"	11"	5	12"	8!3	5	12"	16!5	132	6	8"	55!2	7	7"	55!2	60	5!0	5	7"	7!6	2!8
	7'	15"	11"	5	12"	9!3	5	12"	18!5	144	6	8"	55!2	7	7"	55!2	60	5!0	5	7"	8!0	2!8
	8'	15"	11"	5	12"	10!3	5	12"	20!5	144	6	8"	55!2	7	7"	55!2	60	5!0	5	7"	8!6	2!8
	9'	15"	11"	5	12"	11!3	5	12"	22!5	156	6	8"	55!2	7	7"	55!2	60	5!0	5	7"	9!0	2!8
	10'	15"	11"	5	12"	12!3	5	12"	24!5	168	6	8"	55!2	7	7"	55!2	60	5!0	6	7"	9!6	2!9
12'	8'	18"	13"	5	12"	10!9	5	12"	21!1	144	6	6"	65!6	7	6"	65!6	70	6!0	5	6"	9!6	3!5
	9'	18"	13"	5	12"	11!9	5	12"	23!1	156	6	6"	65!6	7	6"	65!6	70	6!0	5	6"	10!0	3!5
	10'	18"	13"	5	10"	12!9	5	12"	25!1	168	6	6"	65!6	7	6"	65!6	70	6!0	5	6"	10!7	3!5
	11'	18"	13"	5	10"	13!9	5	12"	27!1	168	6	6"	65!6	7	6"	65!6	70	6!0	6	6"	11!1	3!5
	12'	18"	13"	5	10"	14!9	5	12"	29!1	180	6	6"	65!6	7	6"	65!6	70	6!0	6	6"	11!7	3!5

⌖ Total number of bars in the cross-section. * Includes lap splice length.

TABLE NO. IV — 20!25' FILL

Span "S"	Height "H"	Top Slab "T"	Walls "W"	aa Bar Size	aa Spacing	aa Length	bb Bar Size	bb Spacing	bb Length	cc Number ⌖	ee Bar Size	ee Spacing	ee Length *	ff Bar Size	ff Spacing	ff Length *	gg Number ⌖	gg D	hh Bar Size	hh Spacing	hh Length	F
6'	3'	11"	8"	5	12"	4!7	5	12"	9!2	108	5	7"	34!8	5	7"	34!8	40	3!0	4	7"	5!3	2!5
	4'	11"	8"	5	12"	5!7	5	12"	11!2	120	5	7"	34!8	5	7"	34!8	40	3!0	4	7"	5!9	2!5
	5'	11"	8"	5	12"	6!7	5	12"	13!2	120	5	7"	34!8	5	7"	34!8	40	3!0	4	7"	6!3	2!5
	6'	11"	8"	5	12"	7!7	5	12"	15!2	132	5	7"	34!8	5	7"	34!8	40	3!0	4	7"	6!9	2!5
	7'	11"	8"	5	10"	8!7	5	12"	17!2	144	5	7"	34!8	5	7"	34!8	40	3!0	5	7"	7!3	2!5
8'	3'	14"	9"	5	12"	5!1	5	12"	10!1	108	5	7"	44!10	6	7"	44!10	50	4!0	4	7"	5!7	2!6
	4'	14"	9"	5	12"	6!1	5	12"	12!1	120	5	7"	44!10	6	7"	44!10	50	4!0	4	7"	6!1	2!6
	5'	14"	9"	5	12"	7!1	5	12"	14!1	120	5	7"	44!10	6	7"	44!10	50	4!0	4	7"	6!7	2!6
	6'	14"	9"	5	12"	8!1	5	12"	16!1	132	5	7"	44!10	6	7"	44!10	50	4!0	4	7"	7!1	2!6
	7'	14"	9"	5	10"	9!1	5	12"	18!1	144	5	7"	44!10	6	7"	44!10	50	4!0	5	7"	7!7	2!6
	8'	14"	9"	5	10"	10!1	5	12"	20!1	144	5	7"	44!10	6	7"	44!10	50	4!0	5	7"	8!1	2!6
10'	3'	17"	11"	5	12"	5!7	5	12"	10!11	108	6	7"	55!2	7	7"	55!2	60	5!0	5	7"	6!3	2!9
	4'	17"	11"	5	12"	6!7	5	12"	12!11	120	6	7"	55!2	7	7"	55!2	60	5!0	5	7"	6!9	2!9
	5'	17"	11"	5	12"	7!7	5	12"	14!11	120	6	7"	55!2	7	7"	55!2	60	5!0	5	7"	7!3	2!9
	6'	17"	11"	5	12"	8!7	5	12"	16!11	132	6	7"	55!2	7	7"	55!2	60	5!0	5	7"	7!9	2!9
	7'	17"	11"	5	12"	9!7	5	12"	18!11	144	6	7"	55!2	7	7"	55!2	60	5!0	5	7"	8!3	2!9
	8'	17"	11"	5	12"	10!7	5	12"	20!11	144	6	7"	55!2	7	7"	55!2	60	5!0	5	7"	8!9	2!9
	9'	17"	11"	5	12"	11!7	5	12"	22!11	156	6	7"	55!2	7	7"	55!2	60	5!0	6	7"	9!3	2!9
	10'	17"	11"	5	10"	12!7	5	12"	24!11	168	6	7"	55!2	7	7"	55!2	60	5!0	6	7"	9!9	2!9
12'	8'	20?"	13"	5	12"	11!2	5	12"	22!1	144	6	6"	65!6	7	6"	65!6	70	6!0	6	6"	9!3	2!11
	9'	20?"	13"	5	12"	12!2	5	12"	24!1	156	6	6"	65!6	7	6"	65!6	70	6!0	6	6"	9!9	2!11
	10'	20?"	13"	5	10"	13!2	5	12"	26!1	168	6	6"	65!6	7	6"	65!6	70	6!0	6	6"	10!3	2!11
	11'	20?"	13"	5	10"	14!2	5	12"	28!1	168	6	6"	65!6	7	6"	65!6	70	6!0	6	6"	11!3	3!5
	12'	20?"	13"	5	9"	15!2	5	12"	30!1	180	6	6"	65!6	7	6"	65!6	70	6!0	6	6"	11!9	3!5

TABLE NO. V — 25!30' FILL

Span "S"	Height "H"	Top Slab "T"	Walls "W"	aa Bar Size	aa Spacing	aa Length	bb Bar Size	bb Spacing	bb Length	cc Number ⌖	ee Bar Size	ee Spacing	ee Length *	ff Bar Size	ff Spacing	ff Length *	gg Number ⌖	gg D	hh Bar Size	hh Spacing	hh Length	F
6'	3'	12?"	8"	5	12"	4!10	5	12"	9!10	108	5	7"	34!8	5	6"	34!8	40	3!0	4	6"	5!4	2!5
	4'	12?"	8"	5	12"	5!10	5	12"	11!10	120	5	7"	34!8	5	6"	34!8	40	3!0	4	6"	5!10	2!5
	5'	12?"	8"	5	12"	6!10	5	12"	13!10	120	5	7"	34!8	5	6"	34!8	40	3!0	4	6"	6!4	2!5
	6'	12?"	8"	5	12"	7!10	5	12"	15!10	132	5	7"	34!8	5	6"	34!8	40	3!0	4	6"	6!10	2!5
	7'	12?"	8"	5	10"	8!10	5	12"	17!10	144	5	7"	34!8	5	6"	34!8	40	3!0	5	6"	7!4	2!5
8'	3'	16"	9"	5	12"	5!5	5	12"	10!11	108	5	6"	44!10	6	6"	44!10	50	4!0	4	6"	5!9	2!6
	4'	16"	9"	5	12"	6!5	5	12"	12!11	120	5	6"	44!10	6	6"	44!10	50	4!0	4	6"	6!3	2!6
	5'	16"	9"	5	12"	7!5	5	12"	14!11	120	5	6"	44!10	6	6"	44!10	50	4!0	4	6"	6!9	2!6
	6'	16"	9"	5	12"	8!5	5	12"	16!11	132	5	6"	44!10	6	6"	44!10	50	4!0	4	6"	7!3	2!6
	7'	16"	9"	5	10"	9!5	5	12"	18!11	144	5	6"	44!10	6	6"	44!10	50	4!0	5	6"	7!9	2!6
	8'	16"	9"	5	10"	10!5	5	12"	20!11	144	5	6"	44!10	6	6"	44!10	50	4!0	5	6"	8!3	2!6
10'	3'	19"	11"	5	12"	5!11	5	12"	11!6	108	6	6"	55!2	7	6"	55!2	60	5!0	5	6"	6!6	2!9
	4'	19"	11"	5	12"	6!11	5	12"	13!6	120	6	6"	55!2	7	6"	55!2	60	5!0	5	6"	7!0	2!9
	5'	19"	11"	5	12"	7!11	5	12"	15!6	120	6	6"	55!2	7	6"	55!2	60	5!0	5	6"	7!6	2!9
	6'	19"	11"	5	12"	8!11	5	12"	17!6	132	6	6"	55!2	7	6"	55!2	60	5!0	5	6"	8!0	2!9
	7'	19"	11"	5	12"	9!11	5	12"	19!6	144	6	6"	55!2	7	6"	55!2	60	5!0	5	6"	8!6	2!9
	8'	19"	11"	5	12"	10!11	5	12"	21!6	144	6	6"	55!2	7	6"	55!2	60	5!0	5	6"	9!0	2!9
	9'	19"	11"	5	10"	11!11	5	12"	23!6	156	6	6"	55!2	7	6"	55!2	60	5!0	6	6"	9!6	2!9
	10'	19"	11"	5	9"	12!11	5	12"	25!6	168	6	6"	55!2	7	6"	55!2	60	5!0	6	6"	10!0	2!9
12'	8'	23"	13"	5	12"	11!7	5	12"	22!7	144	7	7"	65!6	7	6"	65!6	70	6!0	6	6"	10!0	3!5
	9'	23"	13"	5	10"	12!7	5	12"	24!7	156	7	7"	65!6	7	6"	65!6	70	6!0	6	6"	10!6	3!5
	10'	23"	13"	5	10"	13!7	5	12"	26!7	168	7	7"	65!6	7	6"	65!6	70	6!0	6	6"	11!0	3!5
	11'	23"	13"	5	10"	14!7	5	12"	28!7	168	7	7"	65!6	7	6"	65!6	70	6!0	6	6"	11!6	3!5
	12'	23"	13"	5	7"	15!7	5	12"	30!7	180	7	7"	65!6	7	6"	65!6	70	6!0	6	6"	12!0	3!5

QUANTITIES PER LINEAR FOOT OF BARREL (FIVE BARREL)

Span "S"	Height "H"	Table I Concrete C.Y.	Table I Reinf. Steel Lbs.	Table II Concrete C.Y.	Table II Reinf. Steel Lbs.	Table III Concrete C.Y.	Table III Reinf. Steel Lbs.	Table IV Concrete C.Y.	Table IV Reinf. Steel Lbs.	Table V Concrete C.Y.	Table V Reinf. Steel Lbs.
6'	3'	2.694	381.7	2.380	397.1	2.694	415.6	3.009	418.6	3.324	447.0
	4'	2.843	402.2	2.528	417.9	2.843	436.3	3.157	439.3	3.472	468.2
	5'	2.991	414.6	2.676	430.6	2.991	449.0	3.306	452.1	3.620	481.3
	6'	3.139	435.1	2.824	451.3	3.139	469.8	3.454	472.8	3.769	502.4
	7'	3.287	455.5	2.972	472.0	3.287	520.1	3.602	515.8	3.917	549.2
8'	3'	3.372	554.2	3.645	568.0	4.053	571.4	4.599	574.9	5.144	649.5
	4'	3.526	575.7	3.799	588.7	4.208	592.1	4.753	595.7	5.298	670.6
	5'	3.681	589.3	3.953	606.6	4.362	610.0	4.907	613.5	5.453	689.7
	6'	3.835	610.9	4.108	627.3	4.516	630.7	5.062	634.3	5.607	710.9
	7'	3.989	631.9	4.262	648.1	4.671	670.5	5.216	678.3	5.761	759.2
	8'	4.144	646.0	4.416	680.7	4.825	688.6	5.370	692.7	5.916	774.2
10'	3'	4.415	795.1	5.088	820.7	5.929	844.7	6.602	884.7	7.275	1009.3
	4'	4.582	817.7	5.255	842.7	6.096	866.7	6.769	906.7	7.441	1031.9
	5'	4.748	832.3	5.421	856.7	6.262	880.7	6.935	920.7	7.608	1046.5
	6'	4.915	854.9	5.588	878.7	6.429	902.7	7.102	942.7	7.775	1069.1
	7'	5.082	877.6	5.755	900.8	6.596	924.7	7.269	964.8	7.941	1091.7
	8'	**5.248**	**892.2**	5.921	914.8	6.762	938.7	7.435	978.8	8.108	1106.3
	9'	5.415	914.8	6.088	936.8	6.929	960.8	7.602	1029.9	8.275	1168.8
	10'	5.582	937.4	6.255	958.8	7.096	1012.7	7.769	1058.7	8.441	1197.3
12'	8'	6.881	1169.0	7.882	1107.9	9.082	1261.7	10.083	1298.6	11.083	1376.0
	9'	7.060	1192.6	8.061	1130.0	9.261	1284.3	10.262	1323.0	11.262	1405.7
	10'	7.239	1216.2.	8.240	1182.7	9.440	1312.9	10.441	1353.0	11.441	1430.5
	11'	7.418	1231.7	8.419	1208.9	9.619	1368.6	10.620	1375.8	11.620	1447.4
	12'	7.597	1255.3	8.598	1232.9	9.798	1393.5	10.799	1404.9	11.799	1489.0

NOTE:

For General Notes, Dimensions, and additional Details, see SD 6.01 (1 to 4). For Typical Section and Details, see SD 6.05 (1 of 2).

New box culverts shall not be constructed using 3' or 4' heights without special approval from ADOT Bridge Group. Tables referencing these sizes are provided for extension of existing box culverts only.

ARIZONA DEPARTMENT OF TRANSPORTATION
INTERMODAL TRANSPORTATION DIVISION
BRIDGE GROUP STRUCTURE
REINFORCED CONCRETE BOX CULVERTS
FIVE_BARREL
(15'_-_30'_FILLS)
DRAWING NO. SD 6.05 (2 of 2)

Note to Designer: The information presented in this Standard Detail has been prepared in accordance with recognized engineering principles and is for general use. It should not be used for specific application without competent professional examination and verification of its suitability and applicability by a licensed professional engineer. Contents within the inner border line shall not be altered.

NO	DESCRIPTION OF REVISIONS	MADE BY	DATE
1	Original_Issue	S.U.H.	2-12
2	Added_3',4',5'_height_for_existing_box_extensions_only	D.B.B.	5-15
3			
4			

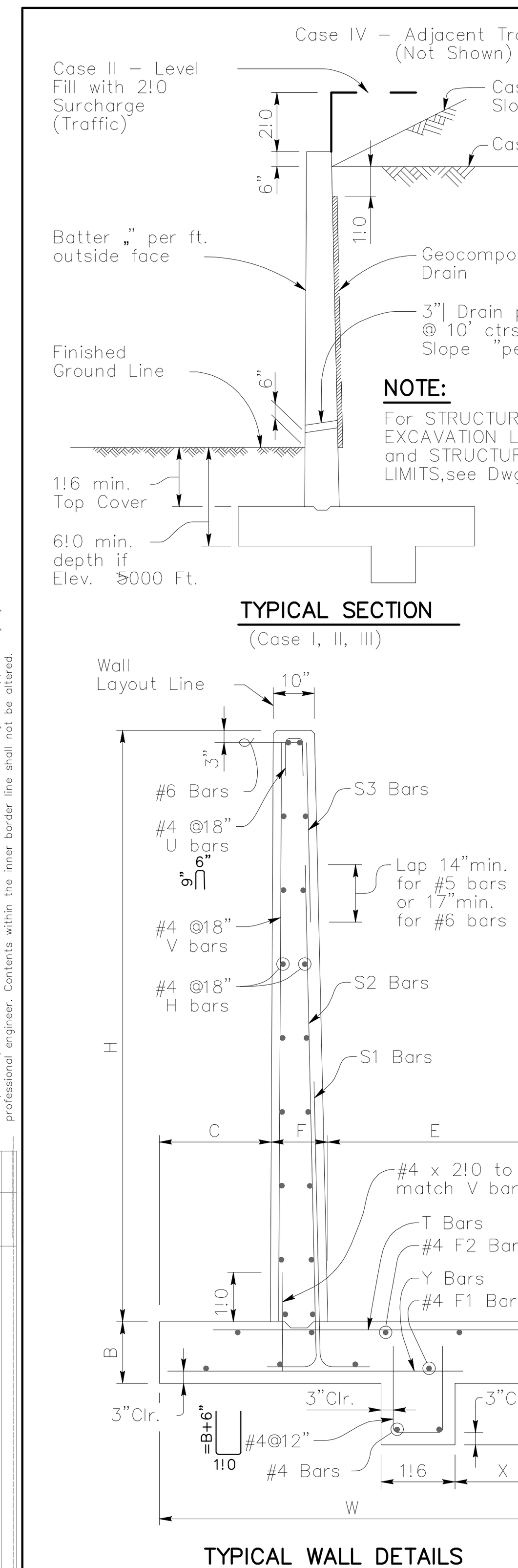

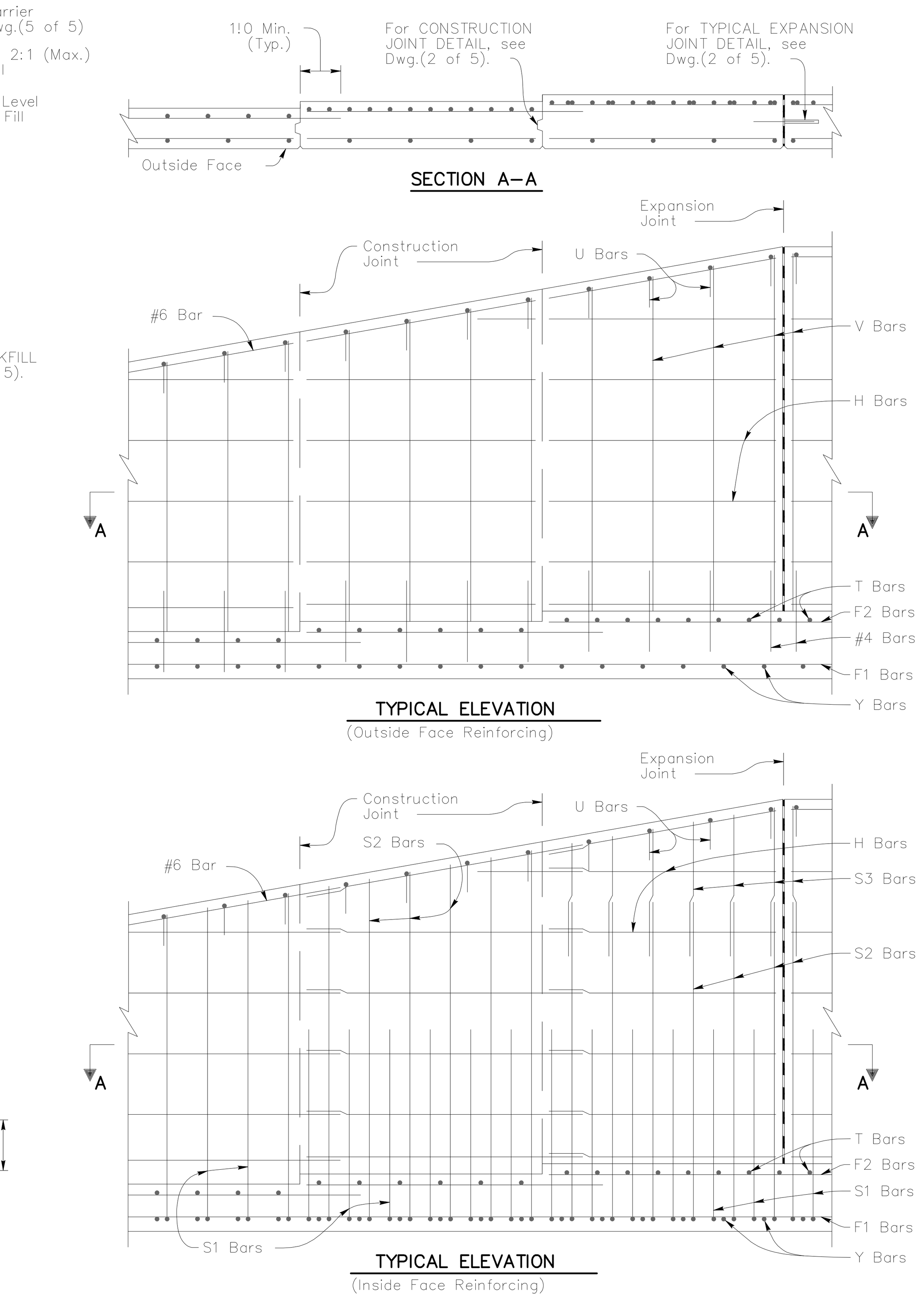

GENERAL NOTES:

Construction Specification - Arizona Department of Transportation Standard Specifications for Road and Bridge Construction, latest Edition.

Design Specifications - AASHTO LRFD Bridge Design Specifications, 7th Edition 2014.

Design:
Soil weight = 120 p.c.f.
Backfill angle of internal friction = 33^
Existing ground angle of internal friction = 31^

All Concrete shall be Class "S" (f'c = 3000 psi).

Reinforcing steel shall conform to ASTM Specification A615. All reinforcing shall be furnished as Grade 60.

All bends and hooks shall meet the requirements of AASHTO LRFD Article 5.10. All bend dimensions for reinforcing steel shall be out-to-out of bars. All placement dimensions for reinforcing steel shall be to center of bars unless noted otherwise.

All reinforcing steel shall have 2 inch clear cover unless noted otherwise.

Chamfer all exposed corners f" unless noted otherwise.

Compact structure backfill for footing and wall base minimum 100 percent of ASTM D698 max. dry density.

See Project Plans for wall layout, top of footing and finished grade elevations, footing step and wall joint locations. Construction Joints shall match the locations of contraction joints. See Project Plans for wall surface treatment. Increase the wall thickness at the face for the depth of surface treatment.

Dimensions shall not be scaled from drawings.

Pay item measure of square foot of wall constructed is measured along front face of wall from top of footing to top of wall cap. Pay item includes all labor and materials for excavation, backfill, drainage and reinforced concrete wall with footing.

Item No. 9140178 RETAINING WALL (REINFORCED CONCRETE CANTILEVER)
Measure: Square Foot

NOTE:

For Retaining Wall Dimensions, Quantities and additional Details, see SD 7.01 (2 to 5).

ARIZONA DEPARTMENT OF TRANSPORTATION
INTERMODAL TRANSPORTATION DIVISION
BRIDGE GROUP STRUCTURE
RETAINING WALL
(REINFORCED CONCRETE CANTILEVER)
SD 7.01 (1 of _)

CASE I - LEVEL FILL

H	W	B	C	F	E	X	S1 Bar Size	S1 Spacing	S1 Length	S2 Bar Size	S2 Spacing	S2 Length	S3 Bar Size	S3 Spacing	S3 Length	H Number ⊢	V Length	Y Bar Size	Y Spacing	Y Length	F1 Number ⊢	T Bar Size	T Spacing	T Length	F2 Number ⊢	qtveu-SERV Lbs./Sq.Ft.	qnveu-SERV Lbs./Sq.Ft.	B'SERV Ft.	qtveu-STR Lbs./Sq.Ft.	qnveu-STR Lbs./Sq.Ft.	B'STR Ft.
4'	3!0	1!0	10"	10"	1!4	8"	5	12"	5!6							4	3!9	5	12"	2!3	2	5	12"	2!3	3	840	480	2.46	1130	650	2.36
5'	**3!6**	**1!0**	**1!0**	**10"**	**1!8**	**9"**	**5**	**12"**	**6!6**							**6**	**4!9**	**5**	**12"**	**2!9**	**2**	**5**	**12"**	**2!9**	**3**	**920**	**560**	**2.91**	**1240**	**760**	**2.79**
6'	**4!0**	**1!0**	**1!2**	**10"**	**2!0**	**10"**	**5**	**12"**	**7!6**							**6**	**5!9**	**5**	**12"**	**3!3**	**2**	**5**	**12"**	**3!3**	**3**	**1010**	**650**	**3.31**	**1380**	**900**	**3.16**
7'	**4!6**	**1!0**	**1!4**	**10"**	**2!4**	**11"**	**5**	**12"**	**8!6**							**8**	**6!9**	**5**	**12"**	**3!9**	**3**	**5**	**12"**	**3!6**	**3**	**1110**	**750**	**3.70**	**1530**	**1040**	**3.52**
8'	**5!0**	**1!2**	**1!6**	**10"**	**2!8**	**1!0**	**5**	**12"**	**9!9**							**10**	**7!9**	**5**	**12"**	**4!3**	**3**	**5**	**12"**	**4!0**	**3**	**1270**	**890**	**4.01**	**1750**	**1240**	**3.79**
9'	**5!6**	**1!2**	**1!9**	**1!0**	**2!9**	**1!2**	**5**	**12"**	**10!9**	**5**						**10**	**8!9**	**5**	**12"**	**4!6**	**3**	**5**	**12"**	**4!0**	**3**	**1350**	**970**	**4.40**	**1880**	**1370**	**4.14**
10'	**6!0**	**1!2**	**1!9**	**1!0**	**3!3**	**1!4**	**6**	**12"**	**11!9**	**5**		**12!9**				**12**	**9!9**	**5**	**12"**	**4!9**	**3**	**5**	**12"**	**4!6**	**4**	**1510**	**1130**	**4.73**	**2100**	**1590**	**4.45**
11'	6!6	1!2	2!0	1!0	3!6	1!6	5	12"	4!3	5	12"	13!9				14	10!9	5	12"	5!3	4	5	12"	4!9	4	1590	1210	5.12	2230	1710	4.81
12'	7!0	1!3	2!0	1!0	4!0	1!8	6	12"	5!3	5	12"	14!9				14	11!9	5	12"	5!6	4	6	12"	5!6	5	1770	1380	5.42	2490	1960	5.08
13'	7!6	1!3	2!3	1!0	4!3	1!10	7	12"	6!6	5	12"	15!9		12"		16	12!9	5	12"	5!9	4	6	9"	5!9	5	1860	1470	5.81	2620	2090	5.43
14'	8!0	1!3	2!3	1!2	4!7	2!0	7	12"	7!0	6	12"	16!9		12"		18	13!9	5	12"	6!3	4	7	12"	6!9	5	2020	1630	6.14	2850	2320	5.74
15'	8!6	1!3	2!6	1!3	4!9	2!2	7	12"	8!0	7	12"	8!9	5	12"	10!9	18	14!9	6	12"	6!6	5	7	12"	7!0	5	2100	1710	6.53	2970	2450	6.10
16'	9!0	1!4	2!6	1!4	5!2	2!4	7	12"	7!3	7	12"	9!9	5	12"	10!9	20	15!9	6	12"	6!9	5	8	12"	8!3	6	2300	1900	6.82	3250	2710	6.36
17'	9!6	1!4	2!9	1!5	5!4	2!6	7	12"	6!0	7	12"	10!6	5	12"	11!0	22	16!9	6	9"	7!3	5	8	12"	8!6	6	2380	1980	7.21	3380	2840	6.72
18'	10!0	1!5	2!9	1!6	5!9	2!8	7	12"	7!0	8	12"	10!3	6	12"	12!9	22	17!9	6	9"	7!6	5	7	8"	8!6	6	2580	2170	7.50	3660	3110	6.99
19'	10!6	1!6	3!0	1!7	5!11	2!10	8	12"	8!0	8	12"	11!6	6	12"	12!9	24	18!9	6	9"	8!0	6	8	9"	9!3	7	2690	2270	7.86	3830	3260	7.30
20'	11!0	1!6	3!0	1!8	6!4	3!0	8	12"	7!6	8	12"	12!6	6	12"	12!9	26	19!9	6	8"	8!3	6	8	8"	9!6	7	2860	2440	8.19	4070	3500	7.61
21'	11!6	1!7	3!3	1!9	6!6	3!2	8	12"	8!3	7	12"	13!6	6	12"	13!0	26	20!9	7	12"	8!9	6	9	9"	10!6	7	2970	2540	8.54	4240	3660	7.92
22'	12!0	1!8	3!3	1!10	6!11	3!4	9	12"	9!6	9	12"	14!0	6	12"	13!3	28	21!9	7	12"	9!0	6	9	9"	11!0	7	3180	2740	8.83	4530	3940	8.18
23'	12!6	1!9	3!6	2!0	7!0	3!6	10	12"	12!3	9	12"	15!6	6	12"	13!3	30	22!9	8	12"	9!3	6	8	6"	10!3	7	3290	2840	9.18	4700	4100	8.49
24'	13!0	1!10	3!6	2!2	7!4	3!8	9	12"	9!3	8	12"	16!6	6	12"	13!6	30	23!9	8	12"	9!6	7	8	6"	10!6	8	3500	3040	9.47	5000	4380	8.76
25'	13!6	2!0	3!9	2!4	7!5	3!10	9	12"	10!3	9	12"	17!6	6	12"	13!9	32	24!9	8	12"	10!0	7	8	6"	10!9	8	3650	3170	9.78	5220	4580	9.02
26'	14!0	2!3	3!9	2!6	7!9	4!0	10	12"	13!0	9	12"	18!6	6	12"	14!3	34	25!9	8	12"	10!3	7	8	6"	11!0	8	3920	3410	9.99	5630	4940	9.19
27'	14!6	2!6	4!0	2!8	7!10	4!2	10	12"	12!3	10	12"	19!9	6	12"	14!3	34	26!9	8	12"	10!6	7	8	6"	11!0	8	4110	3570	10.26	5910	5180	9.41
28'	15!0	2!9	4!0	2!10	8!2	4!4	10	12"	13!3	10	12"	21!0	6		14!3	36	27!9	8	12"	11!0	7	8	6"	11!6	8	4390	3820	10.47	6330	5550	9.58
29'	15!6	3!0	4!3	3!0	8!3	4!6	10	12"	12!0		12"	22!3	6		14!3	38	28!9	8	12"	11!3	7	8	6"	11!9	9	4580	3980	10.73	6610	5800	9.79
30'	16!0	3!3	4!3	3!2	8!7	4!8	10	12"	13!0		12"					38	29!9	8	12"	11!6	8	8	6"	11!9	9	4860	4230	10.94	7040	6180	9.97

⊢ Total number of bars in cross section.

QUANTITIES

H	CASE I Concrete C.Y./Ln.Ft.	CASE I Steel Lbs./Ln.Ft.	CASE I Steel (Horiz. Lap) Lbs./Splice
4'	.30	27	10
5'	**.35**	**31**	**12**
6'	**.40**	**33**	**12**
7'	**.45**	**38**	**14**
8'	**.53**	**42**	**15**
9'	**.61**	**44**	**15**
10'	**.67**	**53**	**17**
11'	.72	57	19
12'	.80	66	20
13'	.86	78	21
14'	.96	84	22
15'	1.04	92	23
16'	1.16	108	25
17'	1.25	119	26
18'	1.37	128	26
19'	1.50	153	29
20'	1.61	171	30
21'	1.75	185	30
22'	1.90	203	32
23'	2.09	229	33
24'	2.29	236	34
25'	2.54	248	36
26'	2.84	264	37
27'	3.16	279	37
28'	3.50	294	38
29'	3.85	317	40
30'	4.22	328	41

LIMIT STATE NOTES:

qtveu-SERV = Total equivalent uniform vertical bearing stress to be used only for the evaluation of settlement based on the Service I Limit State as per ADOT SF-1.
qnveu-SERV = Net equivalent uniform vertical bearing stress to be used only for the evaluation of settlement based on the Service I Limit State as per ADOT SF-1.
B'SERV = Effective footing width to be used only for the evaluation of settlement based on the Service I Limit State as per ADOT SF-1.
qtveu-STR = Total equivalent uniform vertical bearing stress to be used only for the evaluation of bearing resistance based on the Strength I Limit State as per ADOT SF-1.
qnveu-STR = Net equivalent uniform vertical bearing stress to be used only for the evaluation of bearing resistance based on the Strength I Limit State as per ADOT SF-1.
B'STR = Effective footing width to be used only for the evaluation of bearing resistance based on the Strength I Limit State as per ADOT SF-1.

For other applicable limit states, perform project specific-analysis using the procedures in ADOT SF-1. ADOT SF-1 (Materials Group memorandum) is found at Materials Group website.

QUANTITIES NOTE:

Quantities are shown for information purposes only. The pay item is measured per square foot of wall.

Quantities are for one L.F. of wall except for horizontal steel lap splices and footing steps.

Steel quantities for horizontal lap splices shall be added for wall segments greater than 30 feet, and add a splice for each additional wall segment greater than 30 feet. Horizontal 1!0 lap splices occur at construction or contraction joints.

Steel and concrete quantities for footing steps shall be added to those shown in the table.

Bar Size	Dimension A	Dimension D
5	1!0	3f"
6	1!0	4 "
7	1!2	5,"
8	1!4	6"
9	1!8	9"
10	1!10	10"
11	2!0	11"

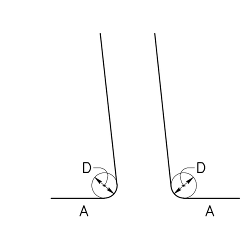

JOINT NOTES:

All retaining walls shall have construction joints or contraction joints spaced at not more than 30!0 apart or as shown. Contraction joints may be substituted for construction joints for wall pours longer than 30!0.

Expansion joints shall be provided at intervals not exceeding 90!0.

Footings may be continuous with no joints (except at footing step locations).

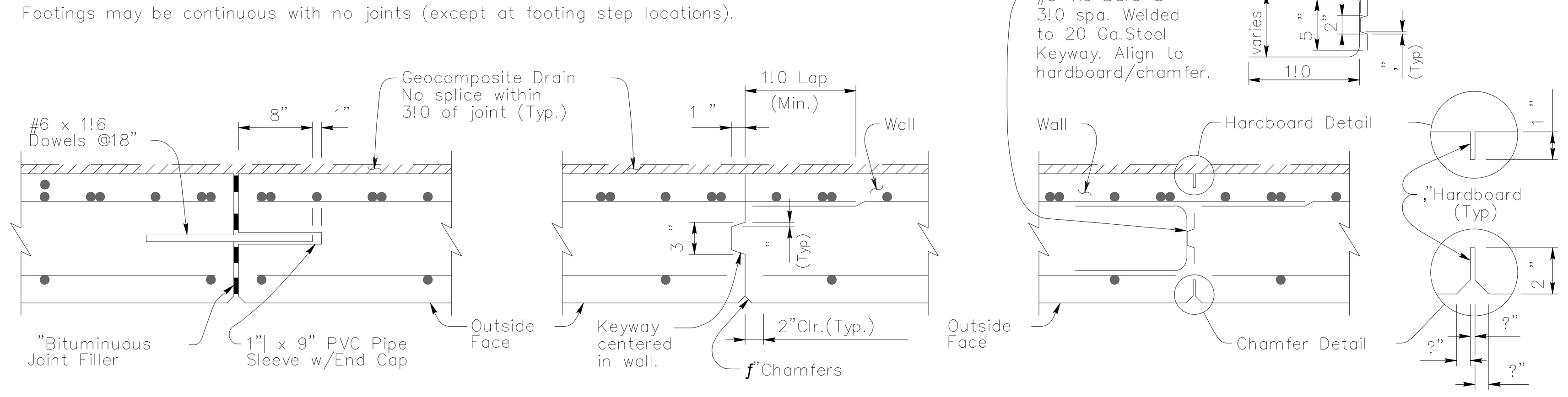

NOTE:

For General Notes, Typical Elevations, Sections, and Details see SD 7.01 (1, 3 and 4).

ARIZONA DEPARTMENT OF TRANSPORTATION
INTERMODAL TRANSPORTATION DIVISION
BRIDGE GROUP STRUCTURE
RETAINING_WALL
(REINFORCED_CONCRETE_CANTILEVER)
SD 7.01 (2 of _)

NO	DESCRIPTION OF REVISIONS	MADE BY	DATE
1	Original_Issue	S.U.H.	9-10
2	General_update,_added_limit_state_values_and_notes.	D.B.B.	1-15
3			
4			

INLET WINGS

Span	Height	0° Skew Conc. C.Y.	0° Skew Steel lbs.	5° Skew	10° Skew	15° Skew	20° Skew	25° Skew	30° Skew	35° Skew	40° Skew	45° Skew
[illegible]	[illegible]	[illegible]	[illegible]	[illegible]	[illegible]	[illegible]	[illegible]	[illegible]	[illegible]	[illegible]	[illegible]	[illegible]

Δc = inlet or outlet concrete quantity per additional barrel. Δs = inlet or outlet steel quantity per additional barrel.

OUTLET WINGS

Span	Height	0° Skew Conc. C.Y.	0° Skew Steel lbs.	5° Skew	10° Skew	15° Skew	20° Skew	25° Skew	30° Skew	35° Skew	40° Skew	45° Skew
[illegible]	[illegible]	[illegible]	[illegible]	[illegible]	[illegible]	[illegible]	[illegible]	[illegible]	[illegible]	[illegible]	[illegible]	[illegible]

Δc = inlet or outlet concrete quantity per additional barrel. Δs = inlet or outlet steel quantity per additional barrel.

NOTES:

All quantities are for headwalls of barrels shown in Table No.1 (0-10' Fill). Quantities are shown for single barrel culvert only. Multi-barrel culvert headwall quantities are obtained by adding, for each additional barrel, Δc and Δs to the inlet and outlet quantities.

NOTE:

For General Notes, Dimensions, and additional Details, see SD 6.01 (1 & 2 of 5). For Headwall Details see SD 6.08 (1 to 8).

ARIZONA DEPARTMENT OF TRANSPORTATION
INTERMODAL TRANSPORTATION DIVISION
BRIDGE GROUP STRUCTURE
REINFORCED CONCRETE BOX CULVERTS
HEADWALL QUANTITIES

Registered Professional Engineer (Civil)
CERTIFICATE NO. 35571
LINDA A POTTER
ARIZONA U.S.A.
EXPIRES 12-31-2018

	NAME	DATE
DESIGN	LAP	12/2015
DRAWN	GGP	12/2015
CHECKED	LAP	12/2015

LOCATION: Queen Valley Flood Mitigation Project, Phase II

ATKINS

STANDARD DETAILS

7

DRAWING NO: G7

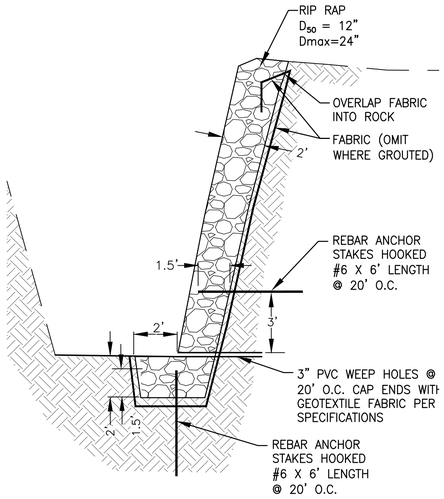

NOTES:

1. RIP RAP SHALL BE GROUTED WHERE EVER SLOPES EXCEED 3:1 OR PER PLAN.
2. RIP RAP SHALL BE ANGULAR WITH A MINIMUM SPECIFIC GRAVITY OF 2.65.
3. ANCHOR STAKES PLACED IN GROUTED RIP RAP SECTIONS WHERE SLOPE EXCEEDS 3:1. ANCHOR STAKES MAY BE OMITTED WHERE SLOPES ARE FLATTER THAN 3:1.
4. OMIT FILTER FABRIC WHERE GROUTED.
5. OMIT ANCHOR STAKES AND WEEP HOLES IN UNGROUTED (LOOSE RIP RAP) SECTIONS.
6. PROVIDE COLOR ADMIXTURE TO GROUT TO MATCH SURROUNDING EARTH TONE

RIP-RAP GRADATION

D_{max}=24"
D_{85} =16" (+/- 2")
D_{50} =12" (+/- 2")
D_{15} =6" (+/- 2")
D_{min} =4"

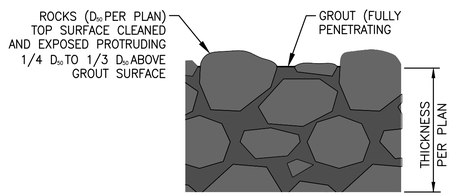

GROUT DETAIL

NO SCALE

RIP RAP DETAIL D_{50}=12"

(LOOSE & GROUTED) NO SCALE

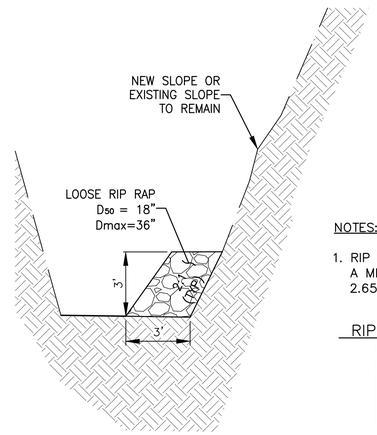

NOTES:

1. RIP RAP SHALL BE ANGULAR WITH A MINIMUM SPECIFIC GRAVITY OF 2.65.

RIP-RAP GRADATION

D_{max}=36"
D_{85} =24" (+/- 2")
D_{50} =18" (+/- 2")
D_{15} =12" (+/- 2")
D_{min} =6"

TOE RIP RAP DETAIL D_{50}=18"

NO SCALE

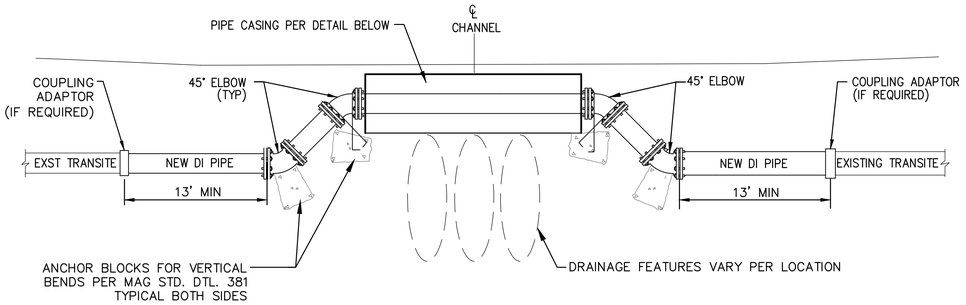

NOTES:

1. ALL PIPE FITTINGS SHALL BE DUCTILE IRON, 6" CLASS 350
2. FITTINGS ON DUCTILE IRON PIPE TO BE RESTRAINED.

WATER MAIN RE-ROUTING

NO SCALE

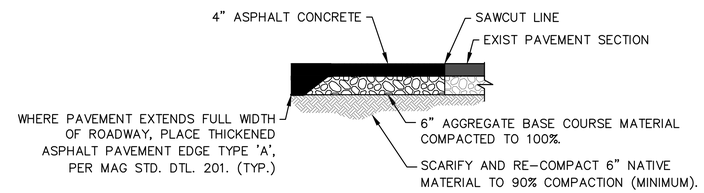

PAVEMENT SECTION

NO SCALE

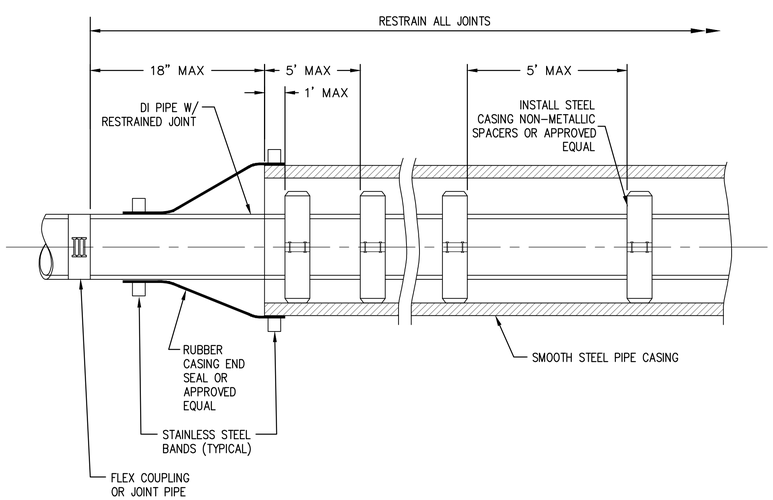

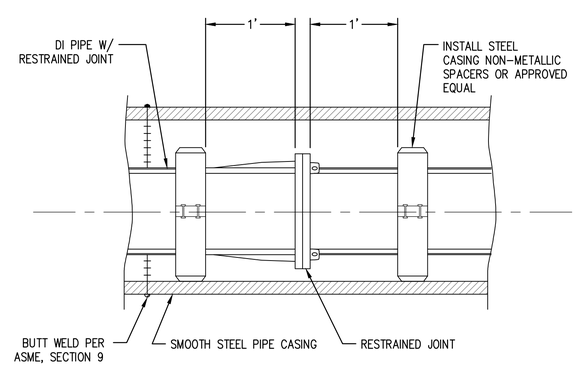

WATERLINE ENCASEMENT DETAILS

NO SCALE

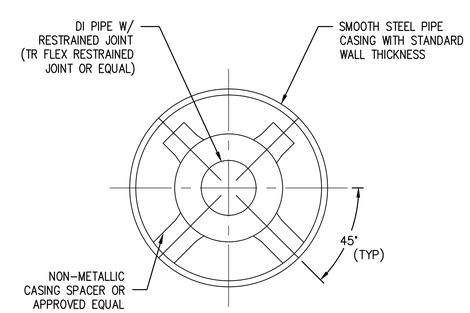

CARRIER PIPE

N.T.S.

CARRIER PIPE SIZE (IN)	MATERIAL	
	SMOOTH STEEL PIPE CASING	
	PIPE WALL THICKNESS (IN)	MIN. CASING SIZE (IN)
6	0.375	12

Registered Professional Engineer (Civil) CERTIFICATE NO. 35571 LINDA A POTTER Date Signed 7/20/16 ARIZONA U.S.A.

EXPIRES 12-31-2018

	NAME	DATE
DESIGN	LAP	12/2015
DRAWN	GGP	12/2015
CHECKED	LAP	12/2015

ATKINS

DETAILS

8

LOCATION

Queen Valley Flood Mitigation Project, Phase II

DRAWING NO: G8

X:\100031696 (Pinal Co Queen Valley)\CADD\Sharon Drive\08_G08_Details.DWG Layout: G8 Jul 20, 2016 - 3:16pm

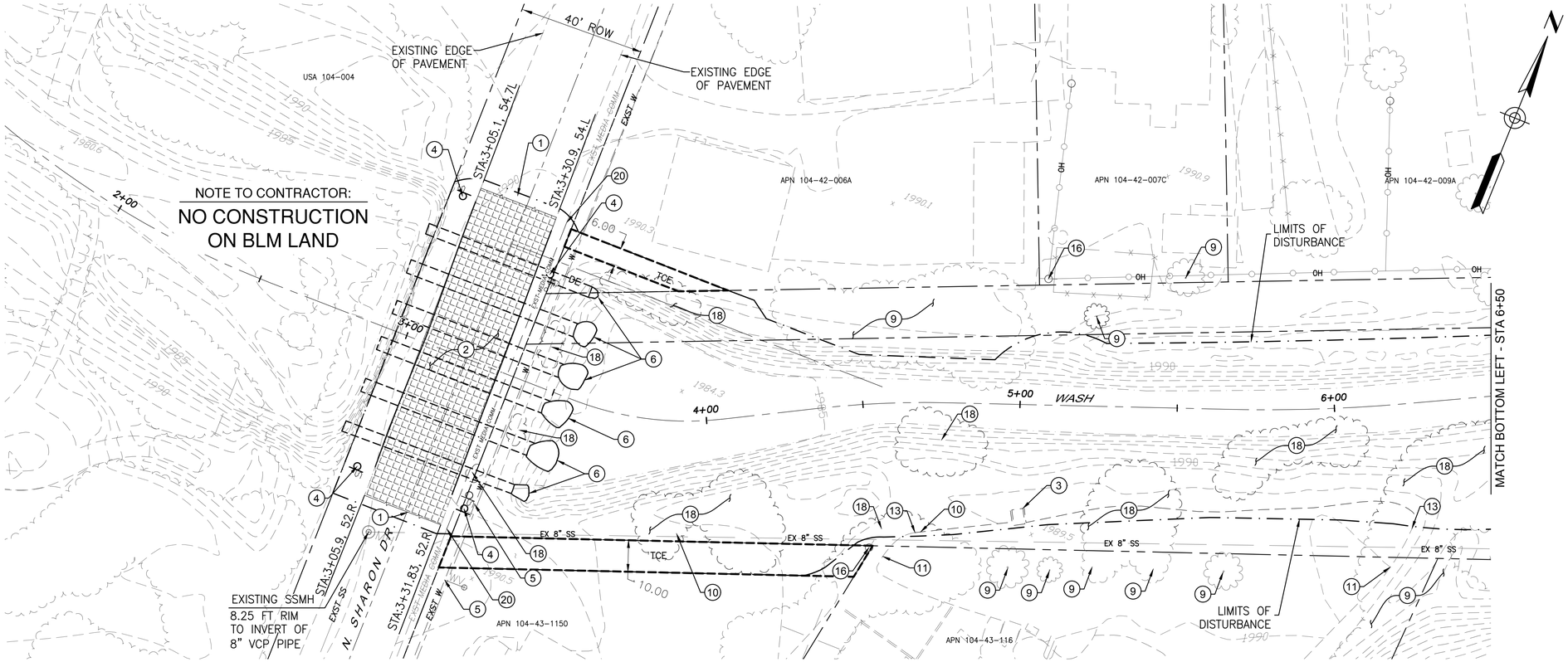

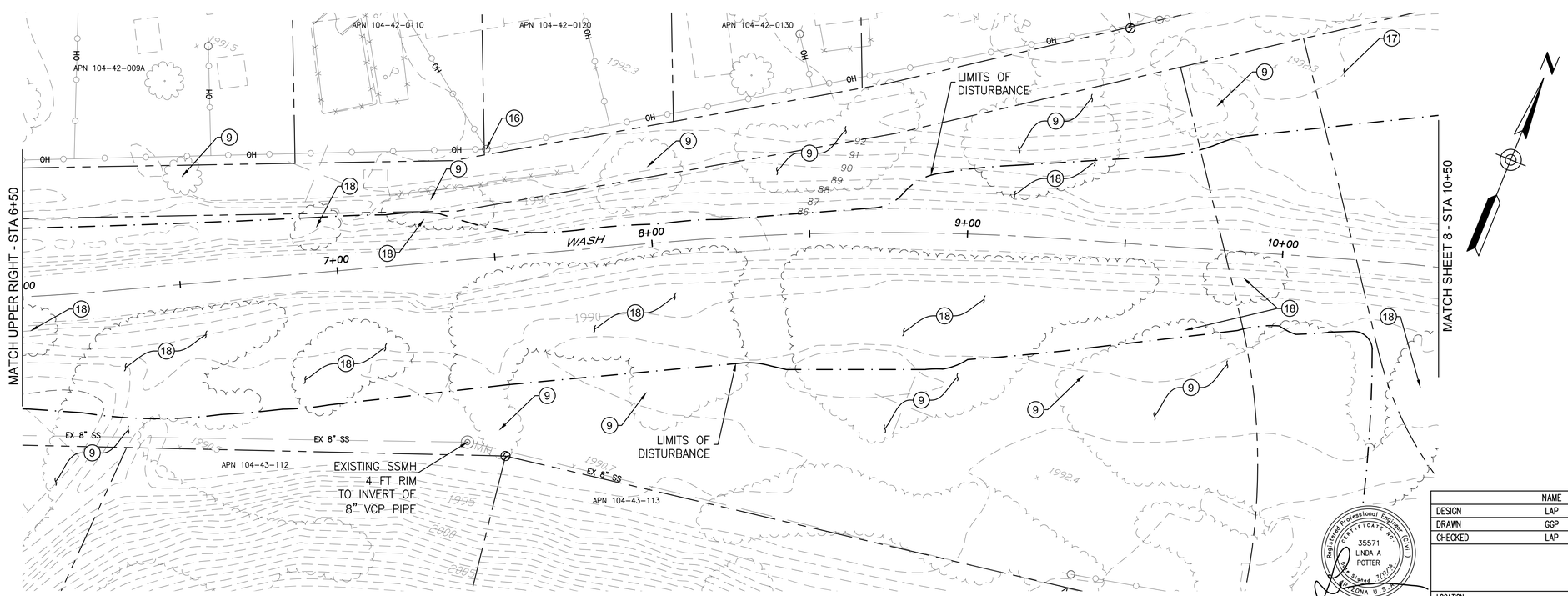

LEGEND:

- PROPOSED CONTRACTOR STAGING AREA
- EXISTING RIP RAP TO BE REMOVED & SALVAGED
- EXISTING ASPHALT TO BE REMOVED
- EXISTING CONCRETE TO BE REMOVED
- EXISTING PIPE CULVERT TO BE REMOVED
- ASPHALT SAWCUT LINE

DEMOLITION NOTES:

1. SAWCUT EXISTING PAVEMENT.
2. REMOVE EXISTING ASPHALT PAVEMENT.
3. REMOVE EXISTING STAIRS.
4. REMOVE AND SALVAGE EXISTING SIGN.
5. EXISTING WATER APPURTENANCE TO BE RELOCATED AS PART OF THE WATERLINE RE-ALIGNMENT.
6. REMOVE EXISTING CULVERT PIPES.
7. EXISTING WIRE FENCE, TO BE RELOCATED BY OWNER.
8. REMOVE AND SALVAGE EXISTING STREET SIGN.
9. PROTECT EXISTING TREE IN PLACE.
10. CAUTION TO BE USED NEAR EXISTING VCP SANITARY SEWER LINE.
11. PROTECT EXISTING RETAINING WALL IN PLACE.
12. EXISTING SHED TO BE RELOCATED BY OWNER PRIOR TO CONSTRUCTION.
13. REMOVE AND SALVAGE EXISTING RIP RAP.
14. EXISTING CONCRETE AND PIPE RAIL TO BE REMOVED.
15. EXISTING HOT TUB TO BE RELOCATED BY OWNER.
16. PROTECT EXISTING POWER POLE.
17. PROTECT EXISTING SLOPE AND VEGETATION IN PLACE.
18. REMOVE EXISTING TREE(S) AND/OR BUSHES.
19. EXISTING STRUCTURE TO BE RELOCATED BY OWNER
20. EXISTING MEDIACOMM COMMUNICATIONS (COAXIAL AND FIBER OPTIC) TO BE REMOVED AND RELOCATED. CONTRACTOR TO PROVIDE CASING, MEDIACOMM TO ROUTE LINES. MAINTAIN SERVICE DURING CONSTRUCTION, COORDINATE WITH MEDIACOMM, SEE SHEET 18.

CONSTRUCTION NOTES:

1. CAUTION: OVERHEAD POWER/UTILITIES IN THE VICINITY OF THIS PROJECT.
2. CONTRACTOR TO COMPLY WITH ARIZONA NATIVE PLANT LAW. PERMITTED PROTECTED PLANTS SHALL BE PROTECTED, SALVAGED AND REPLACED UPON COMPLETION OF CONSTRUCTION.

Call at least two full working days before you begin excavation.
ARIZONA 811
Arizona Blue Stake, Inc.
Dial 8-1-1 or 1-800-STAKE-IT (782-5348)
In Maricopa County: (602) 263-1100

20 0 20 40 60
Horiz. Scale: 1"=20'

Registered Professional Engineer (Civil) CERTIFICATE NO. 35571 LINDA A POTTER Date Signed 7/17/16 ARIZONA U.S.A.
EXPIRES 12-31-2018

	NAME	DATE
DESIGN	LAP	12/2015
DRAWN	GGP	12/2015
CHECKED	LAP	12/2015

ATKINS

DEMOLITION PLAN

LOCATION
Queen Valley Flood Mitigation Project, Phase II

9

DRAWING NO: D1

X:\100031696 (Pinal Co Queen Valley)\CADD\Sharon Drive\09-10_D01-D02_Demolition Sharon Dr.dwg Layout: DEMOLITION 1 Jul 20, 2016 - 3:19pm

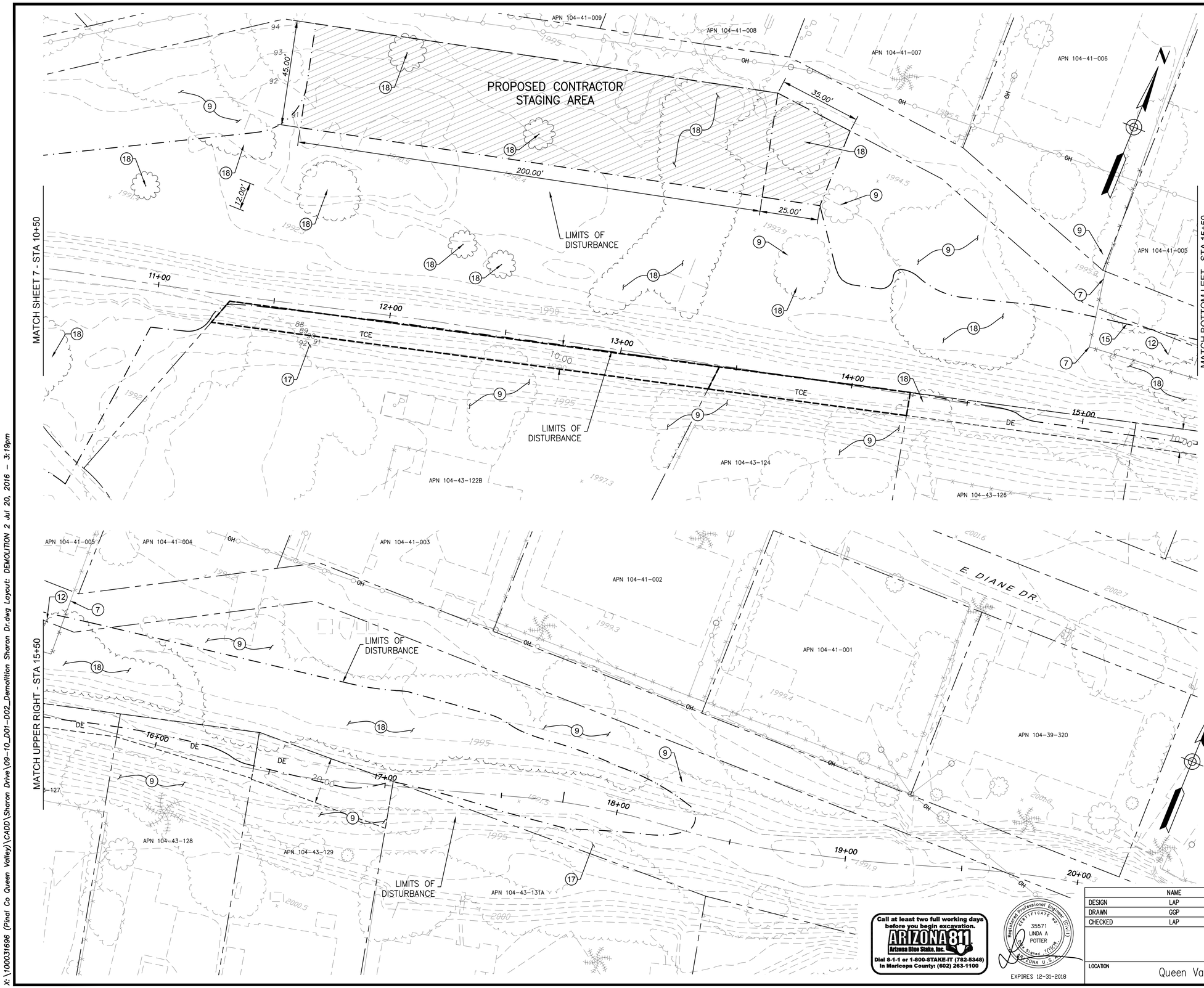

LEGEND:

- PROPOSED CONTRACTOR STAGING AREA
- EXISTING RIP RAP TO BE REMOVED & SALVAGED
- EXISTING ASPHALT TO BE REMOVED
- EXISTING CONCRETE TO BE REMOVED
- EXISTING PIPE CULVERT TO BE REMOVED
- ASPHALT SAWCUT LINE

DEMOLITION NOTES:

1. SAWCUT EXISTING PAVEMENT.
2. REMOVE EXISTING ASPHALT PAVEMENT.
3. REMOVE EXISTING STAIRS.
4. REMOVE AND SALVAGE EXISTING SIGN.
5. EXISTING WATER APPURTENANCE TO BE RELOCATED AS PART OF THE WATERLINE RE-ALIGNMENT.
6. REMOVE EXISTING CULVERT PIPES.
7. EXISTING WIRE FENCE, TO BE RELOCATED BY OWNER.
8. REMOVE AND SALVAGE EXISTING STREET SIGN.
9. PROTECT EXISTING TREE IN PLACE.
10. CAUTION TO BE USED NEAR EXISTING VCP SANITARY SEWER LINE.
11. PROTECT EXISTING RETAINING WALL IN PLACE.
12. EXISTING SHED TO BE RELOCATED BY OWNER PRIOR TO CONSTRUCTION.
13. REMOVE AND SALVAGE EXISTING RIP RAP.
14. EXISTING CONCRETE AND PIPE RAIL TO BE REMOVED.
15. EXISTING HOT TUB TO BE RELOCATED BY OWNER.
16. PROTECT EXISTING POWER POLE.
17. PROTECT EXISTING SLOPE AND VEGETATION IN PLACE.
18. REMOVE EXISTING TREE(S) AND/OR BUSHES.
19. EXISTING STRUCTURE TO BE RELOCATED BY OWNER
20. REMOVE AND SALVAGE PRICKLY PEAR (OPUNTIA) PADDIES.

CONSTRUCTION NOTE:

1. CAUTION: OVERHEAD POWER/UTILITIES IN THE VICINITY OF THIS PROJECT.
2. CONTRACTOR TO COMPLY WITH ARIZONA NATIVE PLANT LAW. PERMITTED PROTECTED PLANTS SHALL BE PROTECTED, SALVAGED AND REPLACED UPON COMPLETION OF CONSTRUCTION.

20 0 20 40 60

Horiz. Scale: 1"=20'

Call at least two full working days before you begin excavation.
ARIZONA 811
Arizona Blue Stake, Inc.
Dial 8-1-1 or 1-800-STAKE-IT (782-5348)
in Maricopa County: (602) 263-1100

Registered Professional Engineer (Civil)
CERTIFICATE NO. 35571
LINDA A POTTER
Date Signed 7-20-16
ARIZONA U.S.A.
EXPIRES 12-31-2018

	NAME	DATE
DESIGN	LAP	12/2015
DRAWN	GGP	12/2015
CHECKED	LAP	12/2015

ATKINS

DEMOLITION PLAN

LOCATION

Queen Valley Flood Mitigation Project, Phase II

10

DRAWING NO: D2

X:\100031696 (Pinal Co Queen Valley)\CADD\Sharon Drive\09-10_D01-D02_Demolition Sharon Dr.dwg Layout: DEMOLITION 2 Jul 20, 2016 - 3:19pm

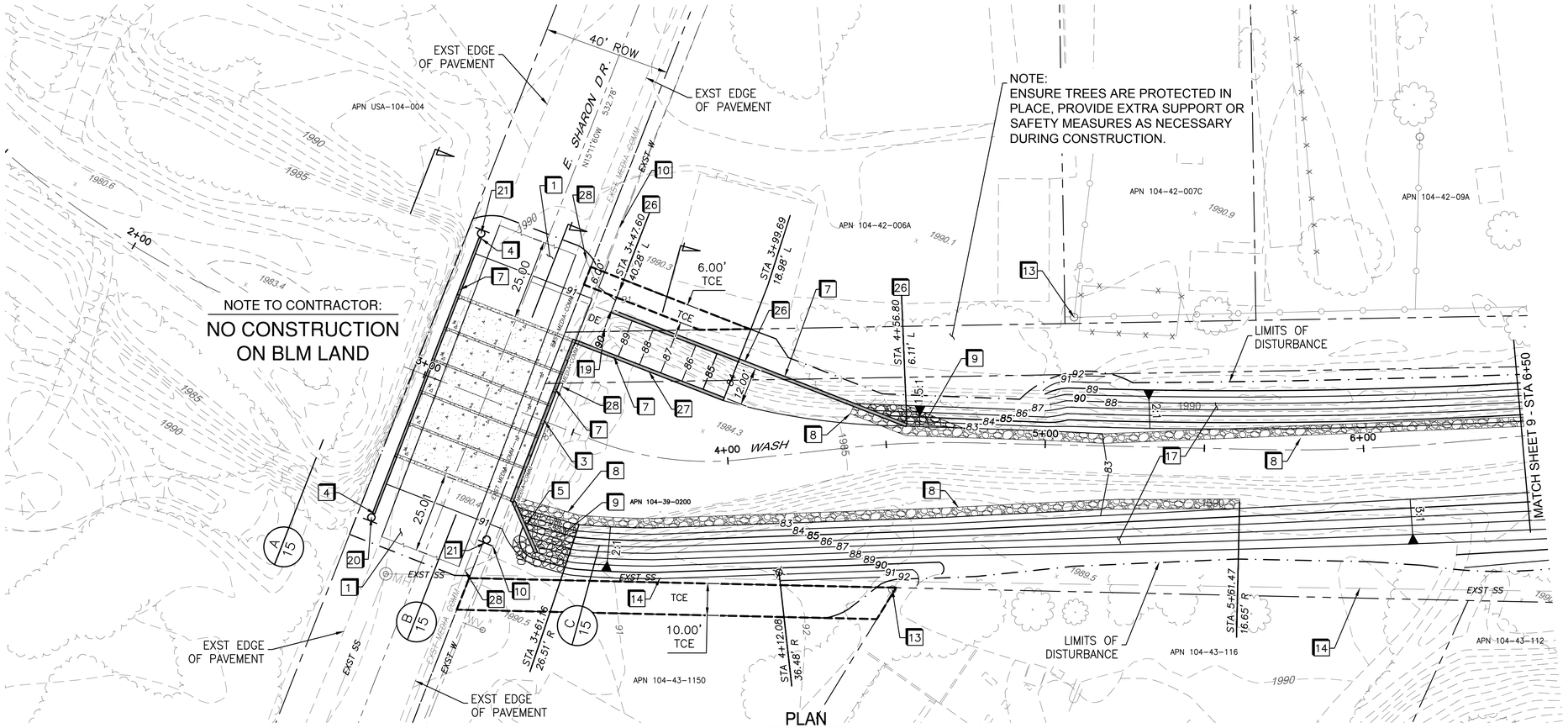

PLAN
SCALE: 1" = 20'

CONSTRUCTION NOTES:

NO.	DESCRIPTION
1	INSTALL A.C. PAVEMENT, PER SECTION DETAIL ON SHEET 8.
3	INSTALL (5) 10'x8' CONCRETE BOX CULVERTS, PER ADOT STD DTL SD6.01 (1 OF 5), SD6.05 (1 OF 2) SD6.05 (2 OF 2). SEE DETAILS ON SHEET 6. PROVIDE ROUGH TEXTURE ON TOP OF BOX.
4	INSTALL OUTLET LEVEL WING, PER ADOT STD DTL SD6.10 (2 OF 2), L= 15' TYPE B.
5	INSTALL INLET WING, PER ADOT STD DETAILS SD6.01 & SD6.08. Θ ANGLES PER HORIZONTAL CONTROL DETAIL, SHEET 3, 2:1 SLOPE.
6	CONSTRUCT ACCESS RAMP, PER DETAIL ON SHEET 5.
7	INSTALL SAFETY RAIL, PER MAG STD DETAIL 145, TYPE 2. SEE DETAIL ON SHEET 4.
8	INSTALL TOE RIP RAP D50= 18", PER DETAIL ON SHEET 8.
9	INSTALL GROUTED RIP RAP D50=12", PER DETAIL ON SHEET 8.
10	EXISTING WATERLINE TO BE REMOVED AND REPLACED, PER DETAILS ON SHEETS 18.
13	PROTECT POWER POLE AND GUY WIRE IN PLACE.
14	PROTECT EXISTING 8" VCP SANITARY SEWER IN PLACE.
17	CONSTRUCT DRAINAGE CHANNEL, PER SHEETS 11 THRU 14.
19	INSTALL TYPE I SINGLE GATE, 12' WIDE PER ADOT STD DWG C-12.10 INCLUDING GATE POST ASSEMBLY DETAIL SHEET 5.
20	INSTALL TYPE 3(1)R OBJECT MARKER SIGN SALVAGED DURING DEMO STAGE OR PER DETAILS ON SHEET 5.
21	INSTALL TYPE 3(1)L OBJECT MARKER SIGN SALVAGED DURING DEMO STAGE OR PER DETAILS ON SHEET 5.
26	INSTALL RETAINING WALL, PER ADOT STD DTLS SD7.01 CASE 1, HEIGHT PER WALL ELEVATION DETAIL, SHEET 5.
27	INSTALL INLET WING, PER ADOT STD DTL SD6.08 MODIFIED ANGLE PER HORIZONTAL CONTROL SHEET 3, AND MODIFIED DIMENSIONS PER DETAIL SHEET 5.
28	INSTALL 6" PVC TELECOMM CASING PER DETAILS, SHEET 18.

SIGNAGE NOTE:

INSTALL NEW POLES AND FOUNDATIONS PER MCDOT STD DTL 2058; BOTTOM OF SIGN TO BE SEVEN FEET ABOVE FINISH GRADE (TYP.)

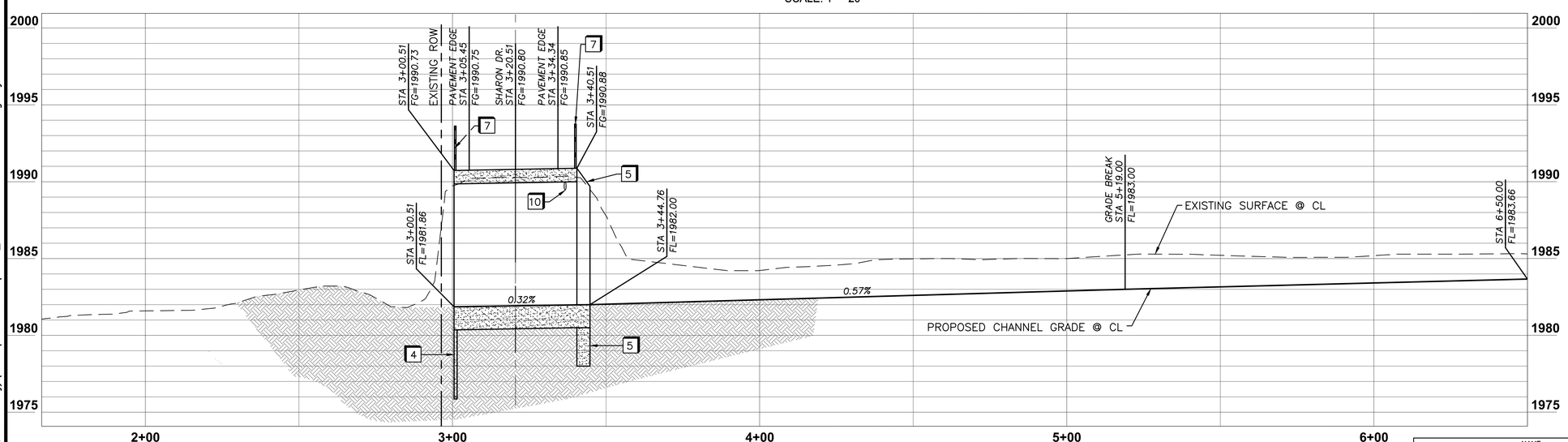

PROFILE
HORIZ: 1" = 20'
VERT: 1" = 4'

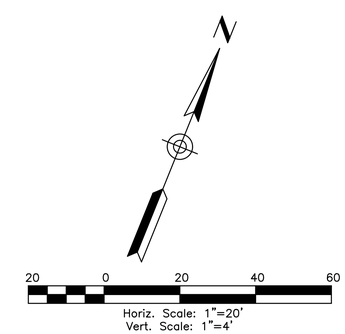

Call at least two full working days before you begin excavation.
ARIZONA 811
Arizona Blue Stake, Inc.
Dial 8-1-1 or 1-800-STAKE-IT (782-5348)
In Maricopa County: (602) 263-1100

Registered Professional Engineer (Civil) CERTIFICATE NO. 35571 LINDA A POTTER Date Signed 7/11/16 ARIZONA U.S.A.
EXPIRES 12-31-2018

	NAME	DATE
DESIGN	LAP	12/2015
DRAWN	GGP	12/2015
CHECKED	LAP	12/2015

ATKINS

CHANNEL IMPROVEMENTS
PLAN & PROFILE

LOCATION
Queen Valley Flood Mitigation Project, Phase II

11

DRAWING NO: PP_01

X:\100031696 (Pinal Co Queen Valley)\CADD\Sharon Drive\11-17_Plan & Profiles 5-17-16.dwg Layout: PP 01 Jul 20, 2016 - 3:22pm

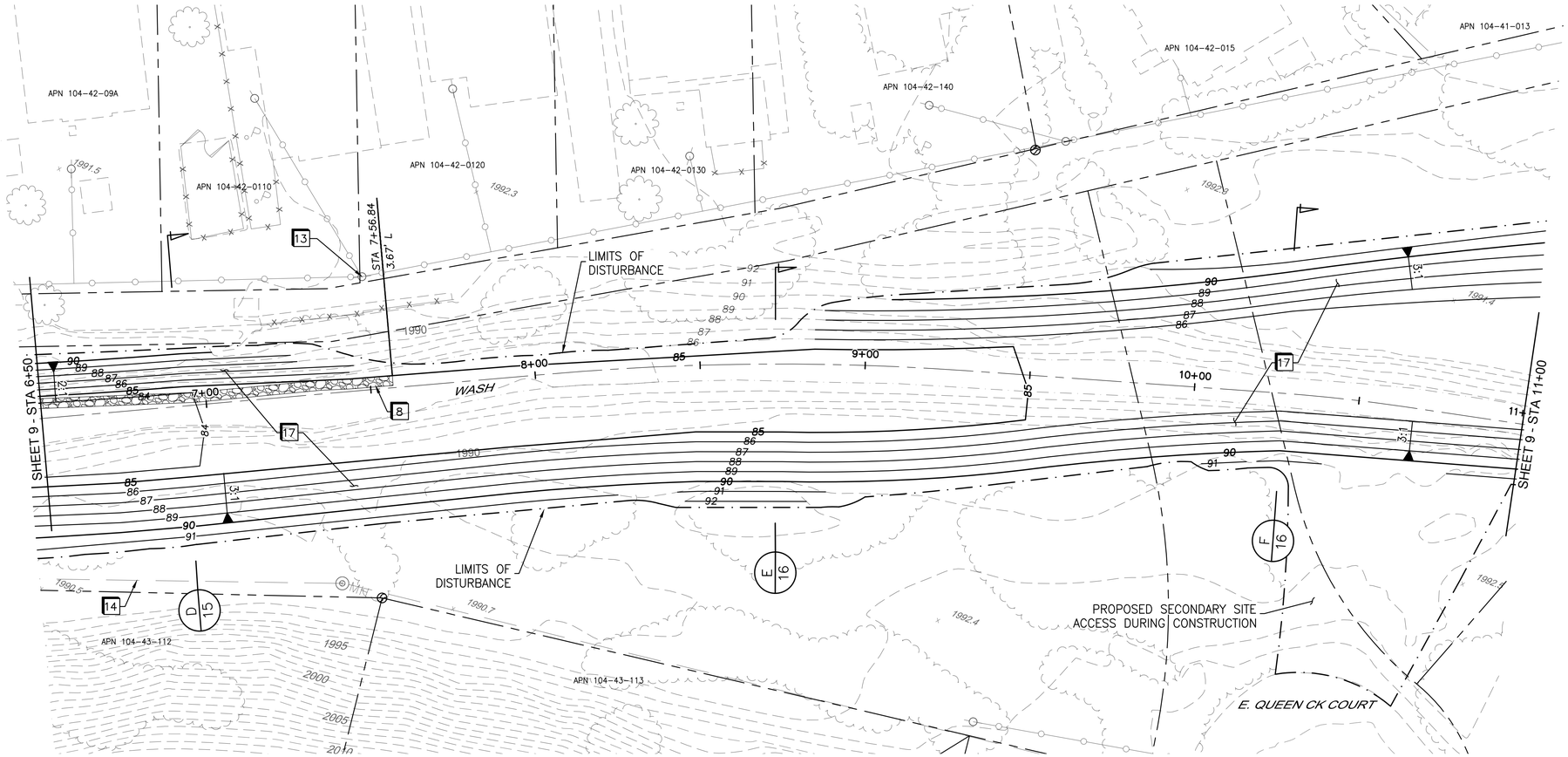

PLAN

SCALE: 1" = 20'

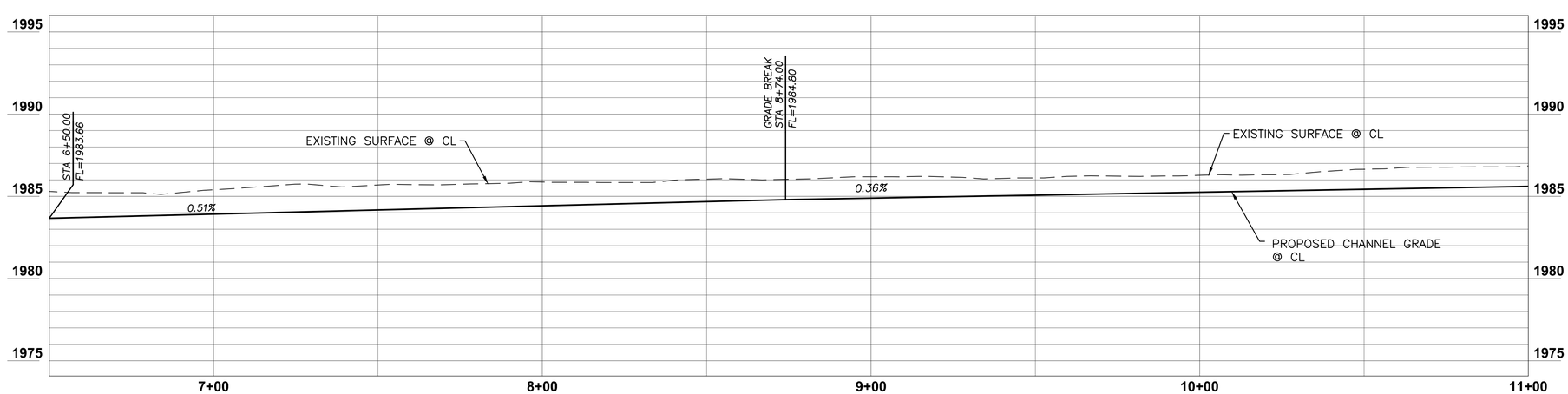

PROFILE

HORIZ: 1" = 20'
VERT: 1" = 4'

CONSTRUCTION NOTES:

NO.	DESCRIPTION
8	INSTALL TOE RIP RAP D50= 18", PER DETAIL ON SHEET 8.
13	PROTECT POWER POLE AND GUY WIRE IN PLACE.
14	PROTECT EXISTING 8" VCP SANITARY SEWER IN PLACE.
17	CONSTRUCT DRAINAGE CHANNEL, PER SHEETS 11 THRU 14.

NOTE
ENSURE TREES ARE PROTECTED IN PLACE. PROVIDE EXTRA SUPPORT OR SAFETY MEASURES AS NECESSARY DURING CONSTRUCTION.

N

20 0 20 40 60

Horiz. Scale: 1"=20'
Vert. Scale: 1"=4'

Call at least two full working days before you begin excavation.
ARIZONA 811
Arizona Blue Stake, Inc.
Dial 8-1-1 or 1-800-STAKE-IT (782-5348)
In Maricopa County: (602) 263-1100

Registered Professional Engineer (Civil)
CERTIFICATE NO. 35571
LINDA A. POTTER
Date Signed 7/17/16
ARIZONA U.S.A.
EXPIRES 12-31-2018

	NAME	DATE
DESIGN	LAP	12/2015
DRAWN	GGP	12/2015
CHECKED	LAP	12/2015

ATKINS

CHANNEL IMPROVEMENTS
PLAN & PROFILE

12

LOCATION
Queen Valley Flood Mitigation Project, Phase II

DRAWING NO: PP_02

X:\100031696 (Pinal Co Queen Valley)\CADD\Sharon Drive\11-17_Plan & Profiles 5-17-16.dwg Layout: PP02 Jul 20, 2016 - 3:23pm

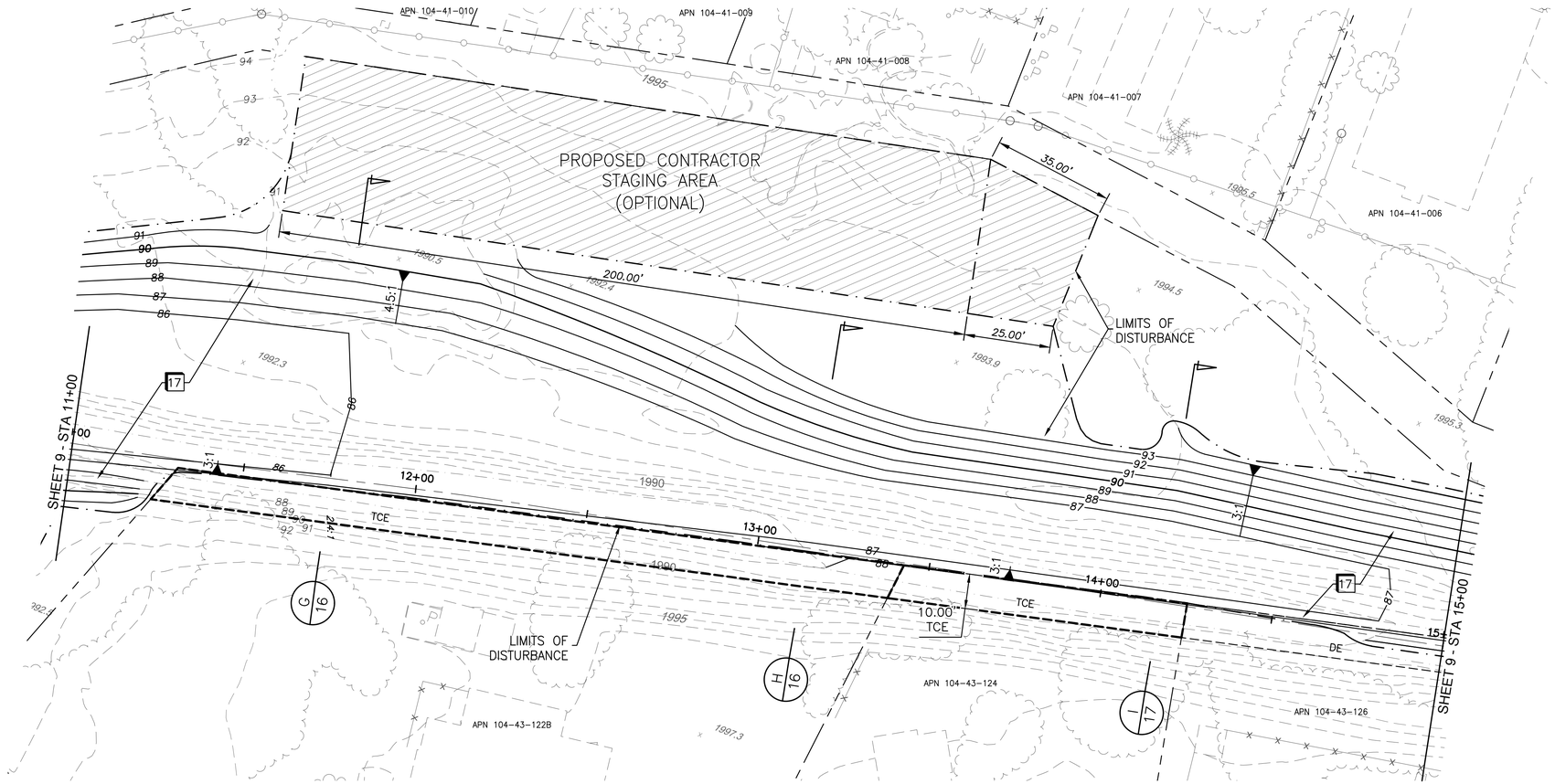

PLAN

SCALE: 1" = 20'

CONSTRUCTION NOTES:

NO.

17 CONSTRUCT DRAINAGE CHANNEL, PER SHEETS 11 THRU 14.

NOTE

ENSURE TREES ARE PROTECTED IN PLACE. PROVIDE EXTRA SUPPORT OR SAFETY MEASURES AS NECESSARY DURING CONSTRUCTION.

20 0 20 40 60

Horiz. Scale: 1"=20'
Vert. Scale: 1"=4'

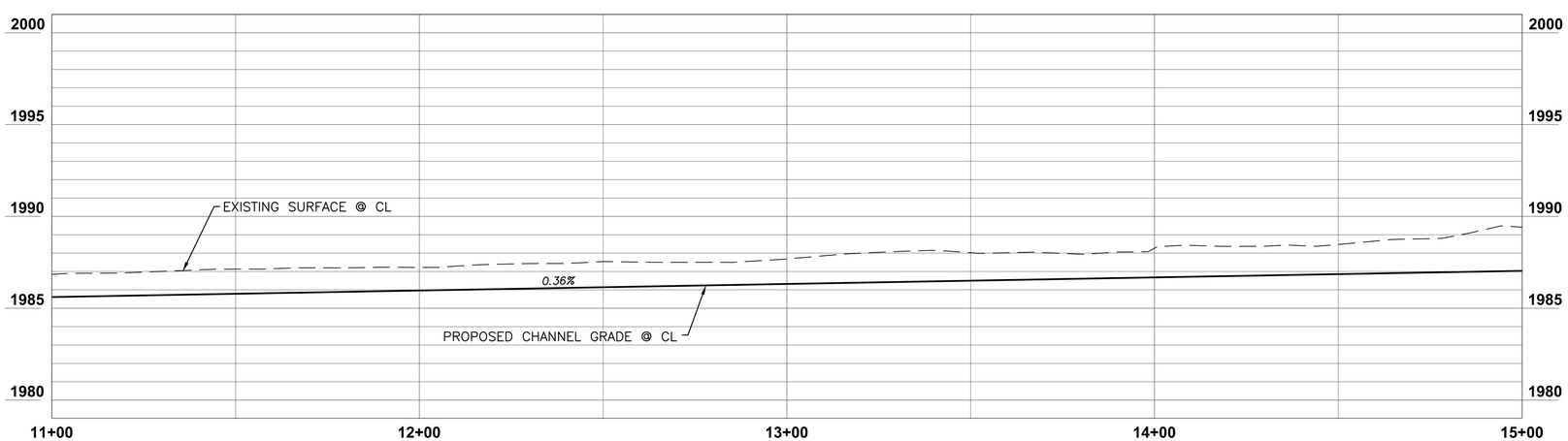

PROFILE

HORIZ: 1" = 20'
VERT: 1" = 4'

Call at least two full working days before you begin excavation.
ARIZONA 811
Arizona Blue Stake, Inc.
Dial 8-1-1 or 1-800-STAKE-IT (782-5348)
In Maricopa County: (602) 263-1100

Registered Professional Engineer (Civil) CERTIFICATE NO. 35571 LINDA A POTTER Date Signed 7/11/16 ARIZONA U.S.A.

EXPIRES 12-31-2018

	NAME	DATE
DESIGN	LAP	12/2015
DRAWN	GGP	12/2015
CHECKED	LAP	12/2015

ATKINS

CHANNEL IMPROVEMENTS
PLAN & PROFILE

LOCATION

Queen Valley Flood Mitigation Project, Phase II

13

DRAWING NO: PP_03

X:\100031696 (Pinal Co Queen Valley)\CADD\Sharon Drive\11-17_Plan & Profiles 5-17-16.dwg Layout: PP03 Jul 20, 2016 - 3:24pm

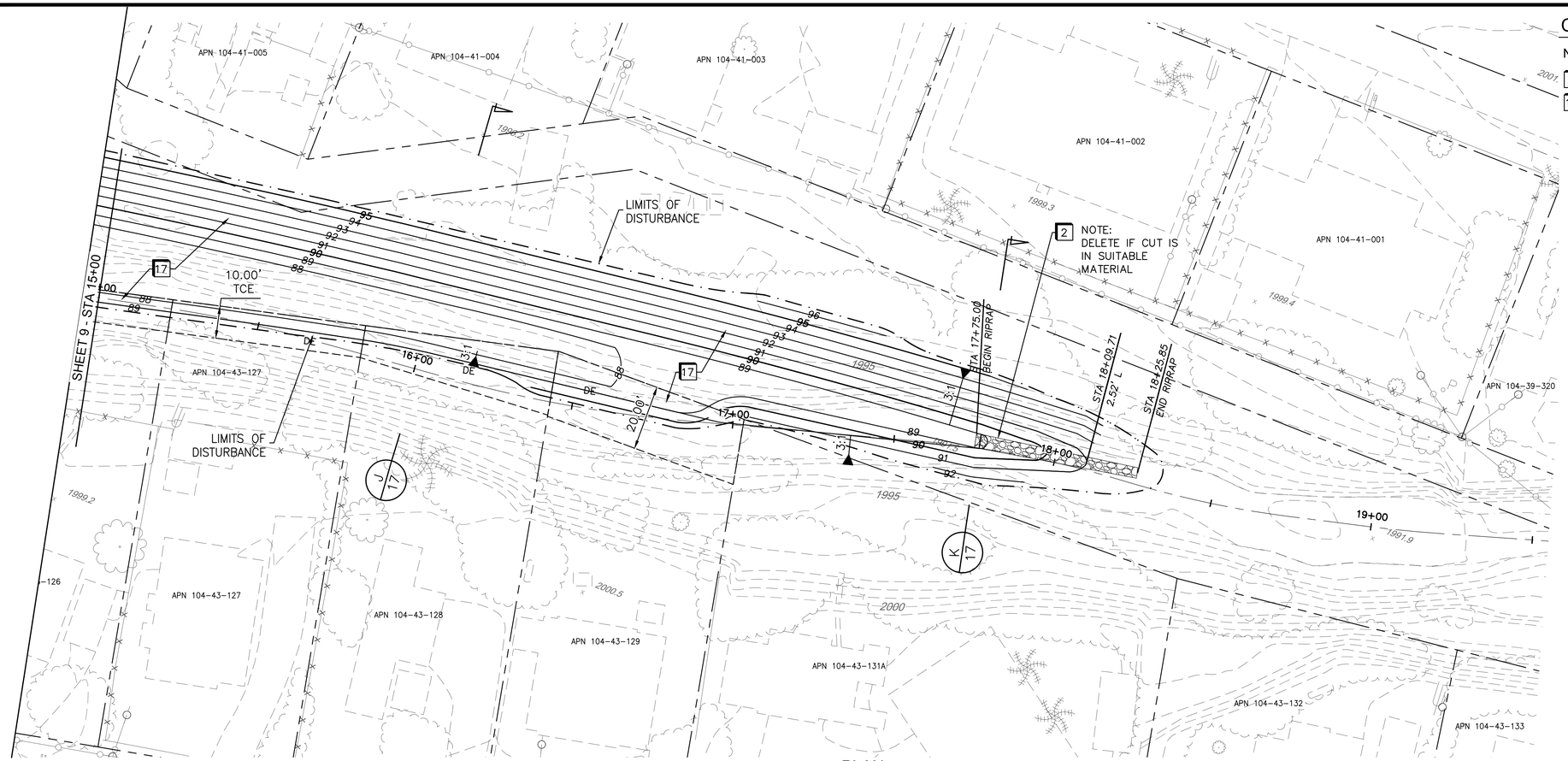

PLAN

SCALE: 1" = 20'

CONSTRUCTION NOTES:

NO.

2 INSTALL LOOSE RIP RAP D_{50}=18", PER DETAIL ON SHEET 8.

17 CONSTRUCT DRAINAGE CHANNEL, PER SHEETS 11 THRU 14.

NOTE

ENSURE TREES ARE PROTECTED IN PLACE. PROVIDE EXTRA SUPPORT OR SAFETY MEASURES AS NECESSARY DURING CONSTRUCTION.

N

20 0 20 40 60

Horiz. Scale: 1"=20'
Vert. Scale: 1"=4'

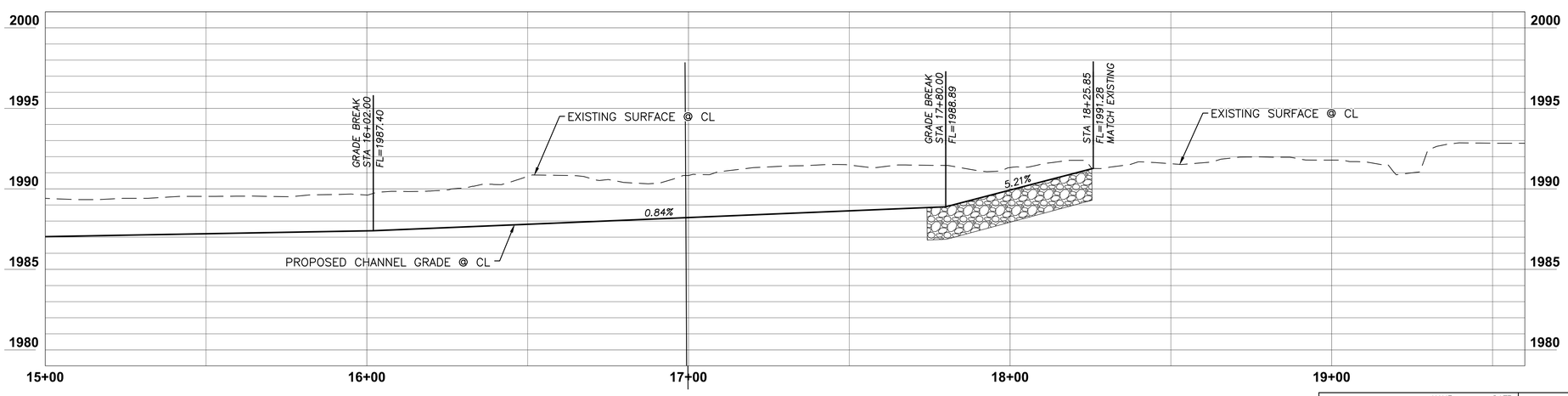

PROFILE

HORIZ: 1" = 20'
VERT: 1" = 4'

Call at least two full working days before you begin excavation.
ARIZONA 811
Arizona Blue Stake, Inc.
Dial 8-1-1 or 1-800-STAKE-IT (782-5348)
In Maricopa County: (602) 263-1100

Registered Professional Engineer (Civil) CERTIFICATE NO. 35571 LINDA A POTTER Date Signed 7/17/16 ARIZONA U.S.A.
EXPIRES 12-31-2018

	NAME	DATE
DESIGN	LAP	12/2015
DRAWN	GGP	12/2015
CHECKED	LAP	12/2015

ATKINS

CHANNEL IMPROVEMENTS
PLAN & PROFILE

LOCATION
Queen Valley Flood Mitigation Project, Phase II

14

DRAWING NO: PP_04

X:\100031696 (Pinal Co Queen Valley)\CADD\Sharon Drive\11-17_Plan & Profiles 5-17-16.dwg Layout: PP04 Jul 20, 2016 - 3:24pm

NOTE:

GRADE CHANNEL BOTTOM TO DRAIN TO CENTER OF CHANNEL (TYPICAL)

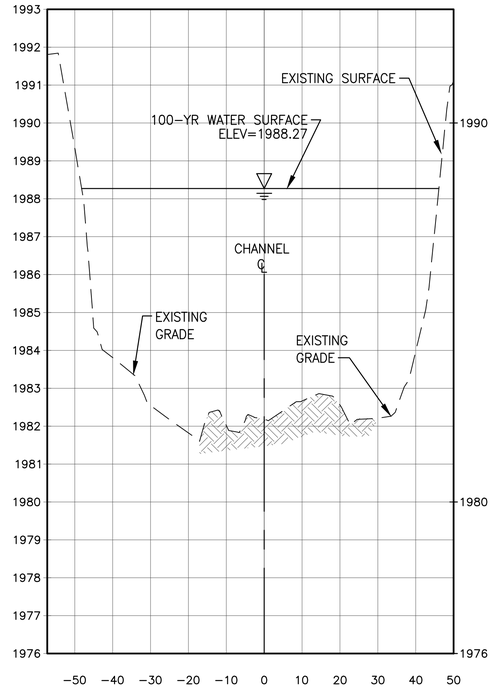

SECTION A - STA: 2+77.54

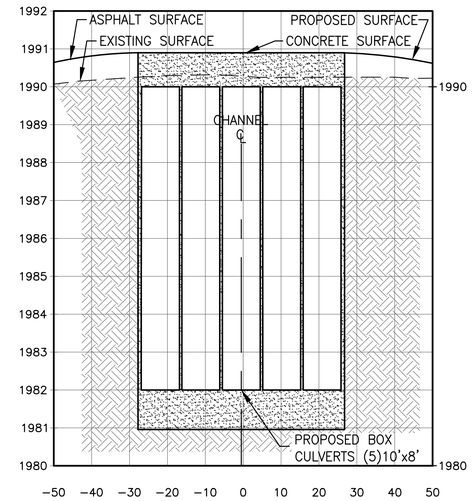

SECTION B - STA: 3+25.00

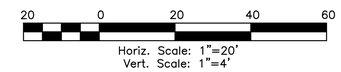

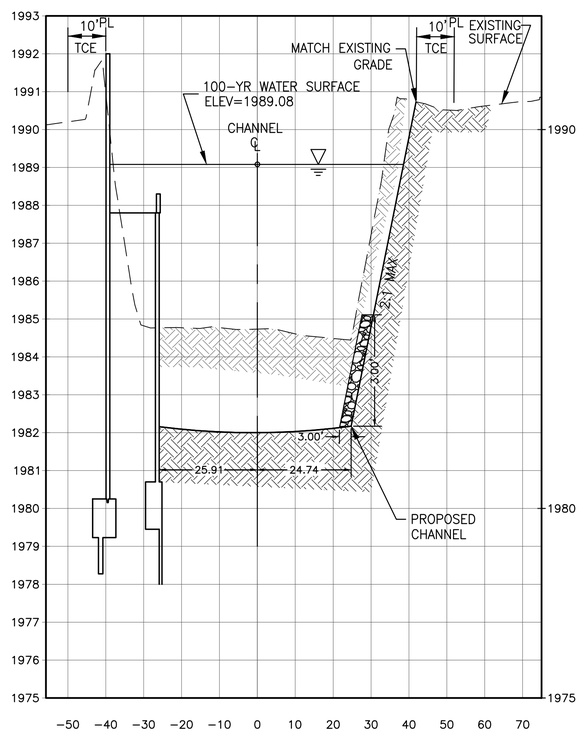

SECTION C - STA: 3+67.44

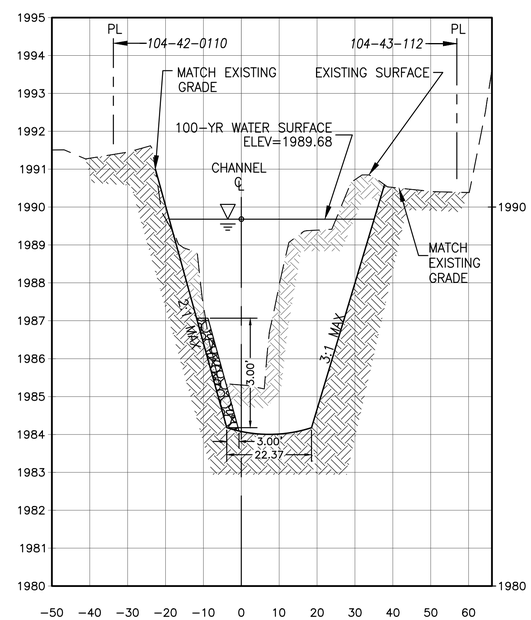

SECTION D - STA: 6+94.72

Registered Professional Engineer (Civil)
CERTIFICATE NO. 35571
LINDA A. POTTER
Date Signed 7/17/16
ARIZONA U.S.A.

EXPIRES 12-31-2018

	NAME	DATE
DESIGN	LAP	12/2015
DRAWN	GGP	12/2015
CHECKED	LAP	12/2015

ATKINS

CHANNEL IMPROVEMENTS
CROSS SECTIONS A, B, C & D

LOCATION

Queen Valley Flood Mitigation Project, Phase II

15

DRAWING NO: CS_01

Call at least two full working days before you begin excavation.
ARIZONA 811
Arizona Blue Stake, Inc.
Dial 8-1-1 or 1-800-STAKE-IT (782-5348)
In Maricopa County: (602) 263-1100

X:\100031696 (Pinal Co Queen Valley)\CADD\Sharon Drive\11-17_Plan & Profiles 5-17-16.dwg Layout: CS01 Jul 20, 2016 - 3:25pm

NOTE:

GRADE CHANNEL BOTTOM TO DRAIN TO CENTER OF CHANNEL (TYPICAL)

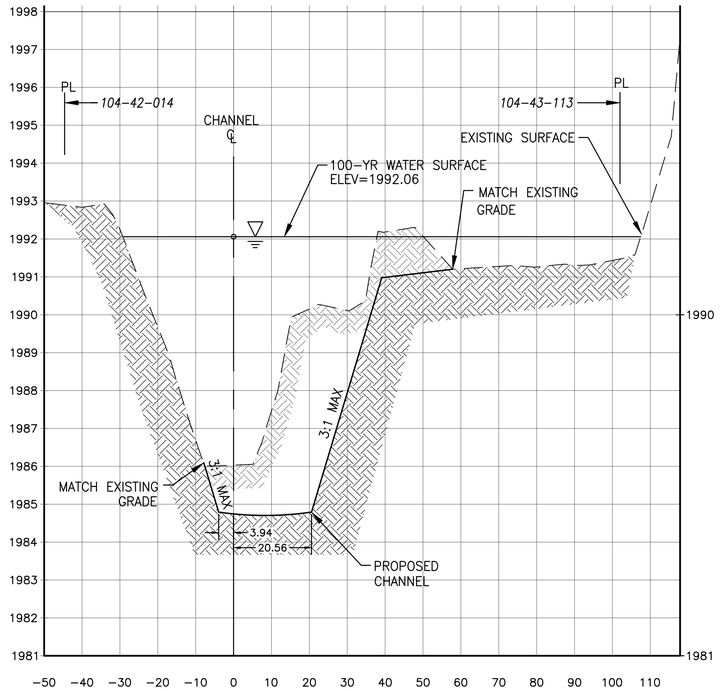

SECTION E - STA: 8+74.97

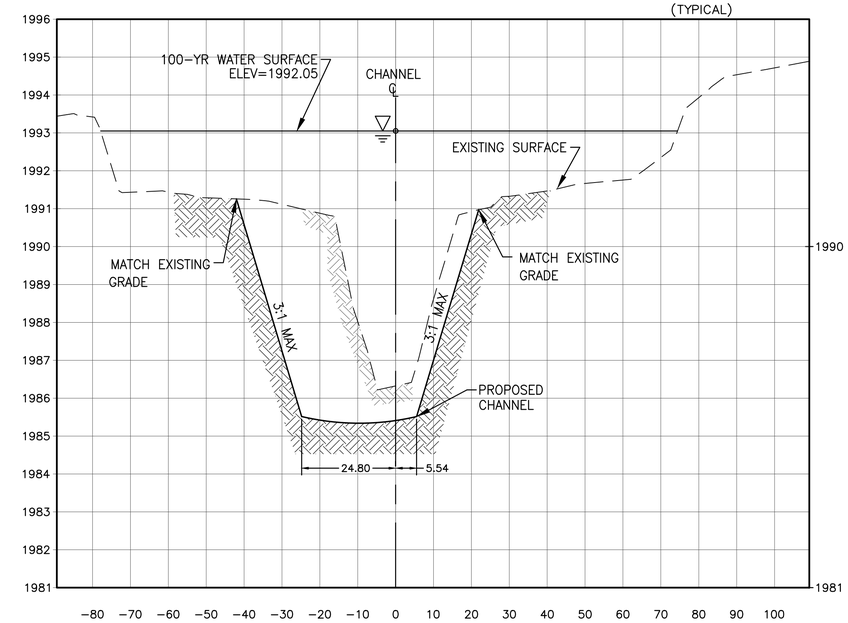

SECTION F - STA: 10+27.02

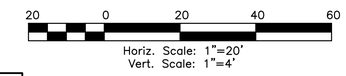

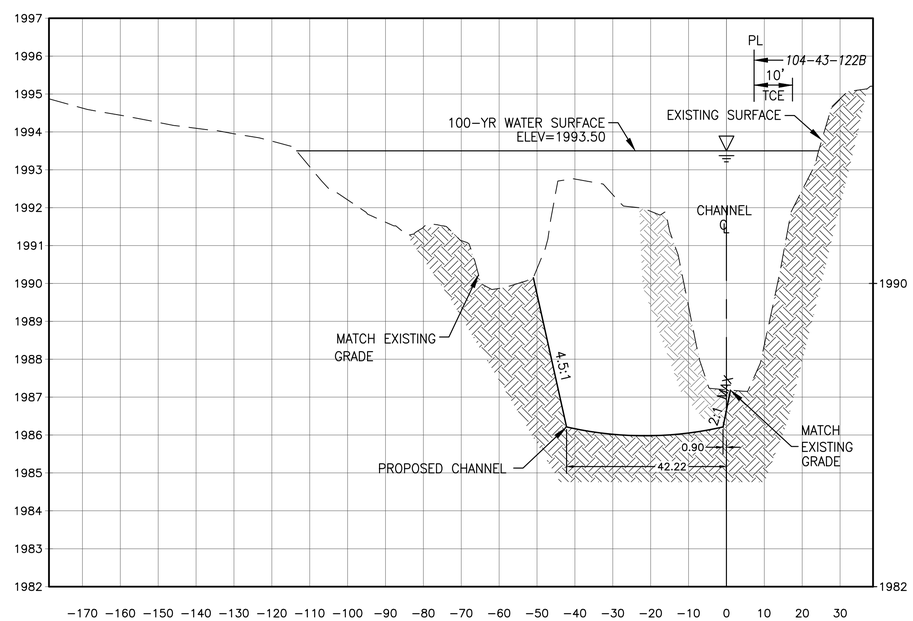

SECTION G - STA: 11+75.19

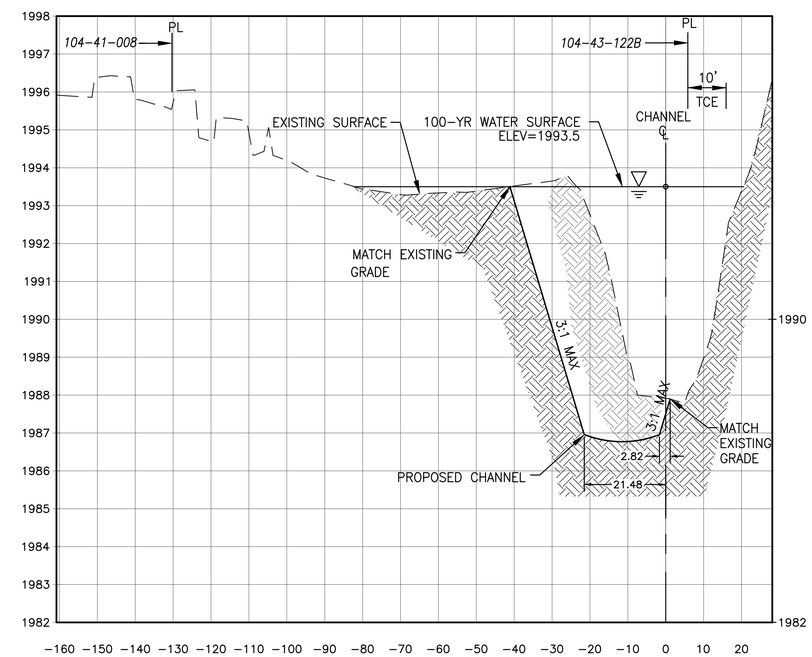

SECTION H - STA: 13+13.99

Call at least two full working days before you begin excavation.
ARIZONA 811
Arizona Blue Stake, Inc.
Dial 8-1-1 or 1-800-STAKE-IT (782-5348)
In Maricopa County: (602) 263-1100

Registered Professional Engineer (Civil) CERTIFICATE NO. 35571 LINDA A POTTER Date Signed 10/24/16 ARIZONA U.S.A.

EXPIRES 12-31-2018

	NAME	DATE
DESIGN	LAP	12/2015
DRAWN	GGP	12/2015
CHECKED	LAP	12/2015

ATKINS

CHANNEL IMPROVEMENTS
CROSS SECTIONS E, F, G & H

LOCATION

Queen Valley Flood Mitigation Project, Phase II

16

DRAWING NO: CS_02

X:\100031696 (Pinal Co Queen Valley)\CADD\Sharon Drive\11-17_Plan & Profiles 5-17-16.dwg Layout: CS02 Jul 20, 2016 - 3:26pm

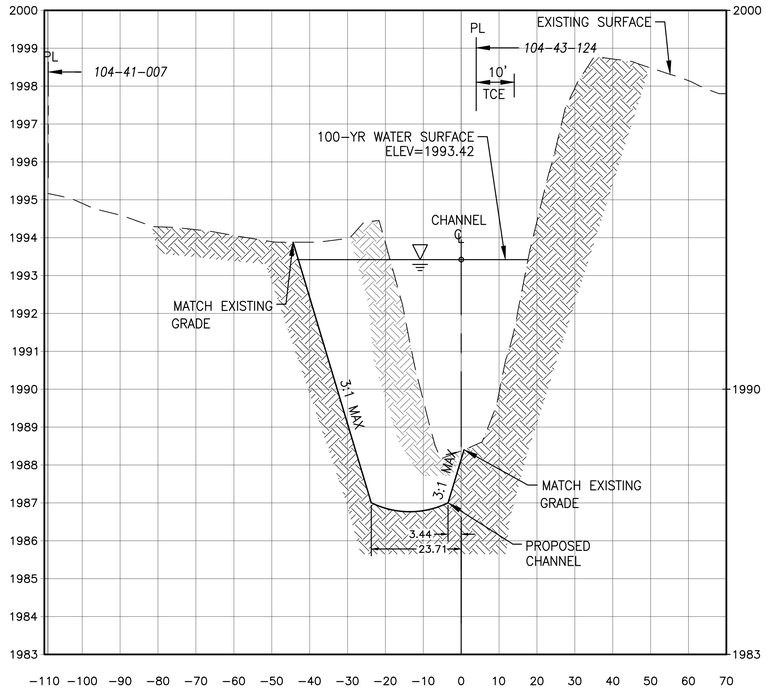

SECTION I - STA: 14+17.12

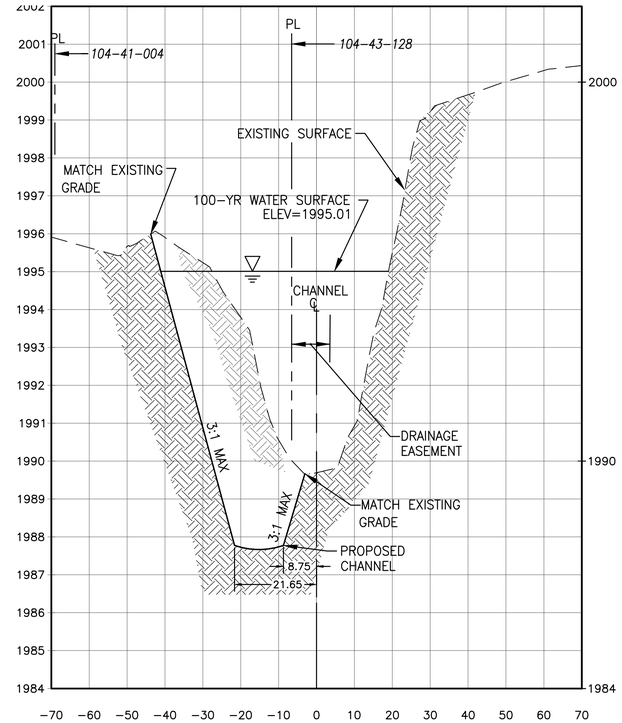

SECTION J - STA: 16+02.13

NOTE:

GRADE CHANNEL BOTTOM TO DRAIN TO CENTER OF CHANNEL (TYPICAL)

20 0 20 40 60

Horiz. Scale: 1"=20'
Vert. Scale: 1"=4'

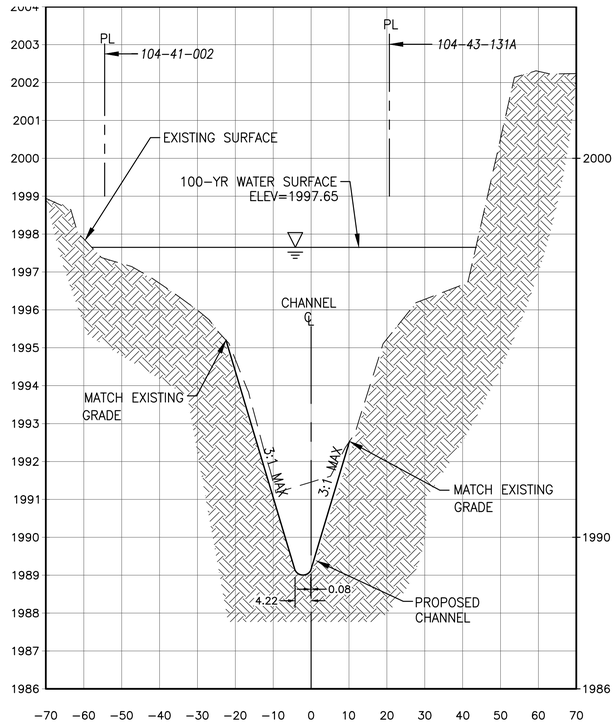

SECTION K - STA: 17+76.84

Call at least two full working days before you begin excavation.
ARIZONA 811
Arizona Blue Stake, Inc.
Dial 8-1-1 or 1-800-STAKE-IT (782-5348)
In Maricopa County: (602) 263-1100

Registered Professional Engineer (Civil)
CERTIFICATE NO. 35571
LINDA A POTTER
Date Signed 7/17/16
ARIZONA U.S.A.
EXPIRES 12-31-2018

	NAME	DATE
DESIGN	LAP	12/2015
DRAWN	GGP	12/2015
CHECKED	LAP	12/2015

ATKINS

CHANNEL IMPROVEMENTS
CROSS SECTIONS I, J,& K

LOCATION
Queen Valley Flood Mitigation Project, Phase II

17

DRAWING NO: CS_03

X:\100031696 (Pinal Co Queen Valley)\CADD\Sharon Drive\11-17_Plan & Profiles 5-17-16.dwg Layout: CS03 Jul 20, 2016 - 3:27pm

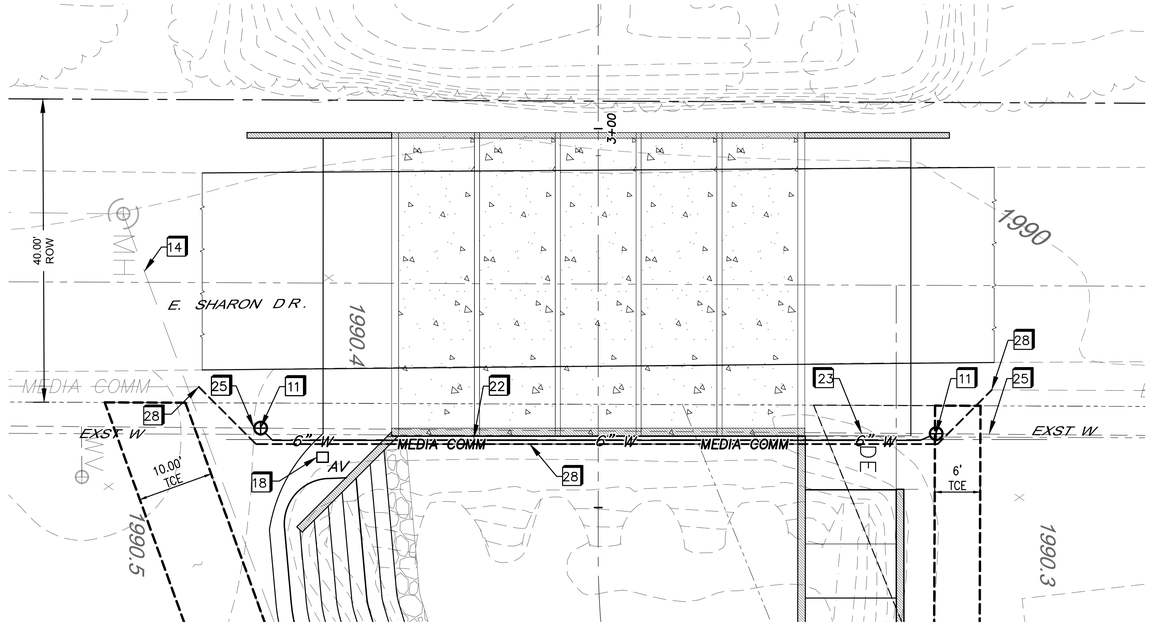

PLAN

E. SHARON DR.

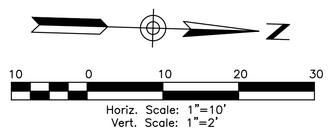

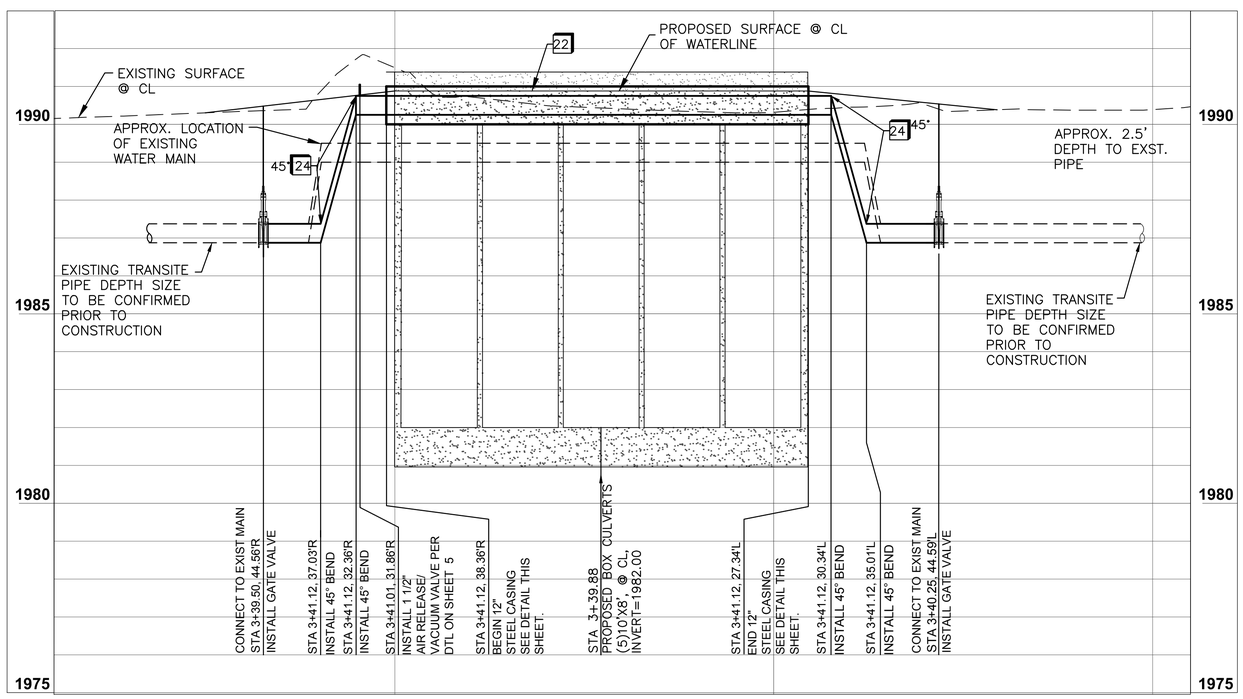

PROFILE

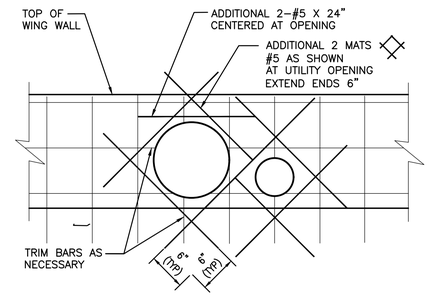

UTILITY OPENINGS AT WING WALL DETAIL

NTS

CONSTRUCTION NOTES:

NO.	DESCRIPTION
11	INSTALL GATE VALVE W/ BOX & COVER, PER MAG STD DTL 391 AND THRUST BLOCK PER MAG STD DETAIL 301. DIAMETER TO MATCH PIPE SIZE.
14	PROTECT EXISTING 8" VCP SANITARY SEWER IN PLACE.
18	INSTALL COMBINATION 1 ½"AIR RELEASE AND VACUUM VALVE PER DETAIL ON SHEET 5.
22	INSTALL WATER LINE ENCASEMENT, PER DETAIL SHEET 8.
23	INSTALL 6" DUCTILE IRON WATERLINE PIPE WITH MECHANICAL JOINTS AND REMOVE EXISTING UNUSED PIPE.
24	INSTALL 6" DUCTILE IRON BEND WITH MECHANICAL JOINTS.
25	CONNECT TO EXISTING WATER MAIN.
28	INSTALL 6" PVC TELECOMM CASING PER DETAILS THIS SHEET. MEDIACOMM TO INSTALL CABLES IN CASING. MAINTAIN SERVICE DURING CONSTRUCTION, COORDINATE WITH MEDIACOMM.

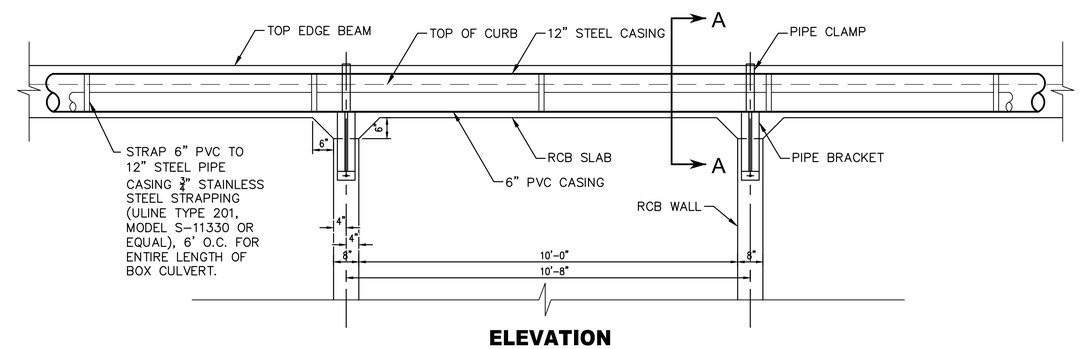

ELEVATION

NTS

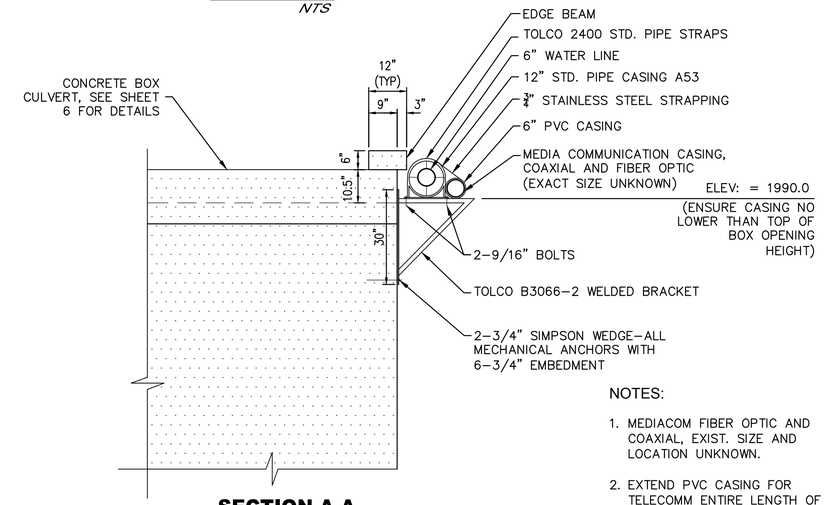

SECTION A-A

NTS

NOTES:

1. MEDIACOM FIBER OPTIC AND COAXIAL, EXIST. SIZE AND LOCATION UNKNOWN.
2. EXTEND PVC CASING FOR TELECOMM ENTIRE LENGTH OF RE-ROUTING.

PIPE SUPPORT DETAILS

NTS

NOTE: ALL EXISTING UTILITIES ARE APPROXIMATE. CONTRACTOR TO FIELD VERIFY ALL UTILITIES PRIOR TO CONSTRUCTION.

Call at least two full working days before you begin excavation.
ARIZONA 811
Arizona Blue Stake, Inc.
Dial 8-1-1 or 1-800-STAKE-IT (782-5348)
In Maricopa County: (602) 263-1100

Registered Professional Engineer (Civil) CERTIFICATE NO. 35571 LINDA A POTTER Date Signed 7/01/16 ARIZONA U.S.A.
EXPIRES 12-31-2018

	NAME	DATE
DESIGN	LAP	12/2015
DRAWN	GGP	12/2015
CHECKED	LAP	12/2015

ATKINS

WATER AND UTILITY IMPROVEMENTS
PLAN & PROFILE

LOCATION
Queen Valley Flood Mitigation Project, Phase II

18

DRAWING NO: QVW_01

X:\100031696 (Final Co Queen Valley)\CADD\Sharon Drive\18_QVW01_Plan & Profiles_Water.dwg Layout: QVW 01 Jul 20, 2016 – 3:39pm

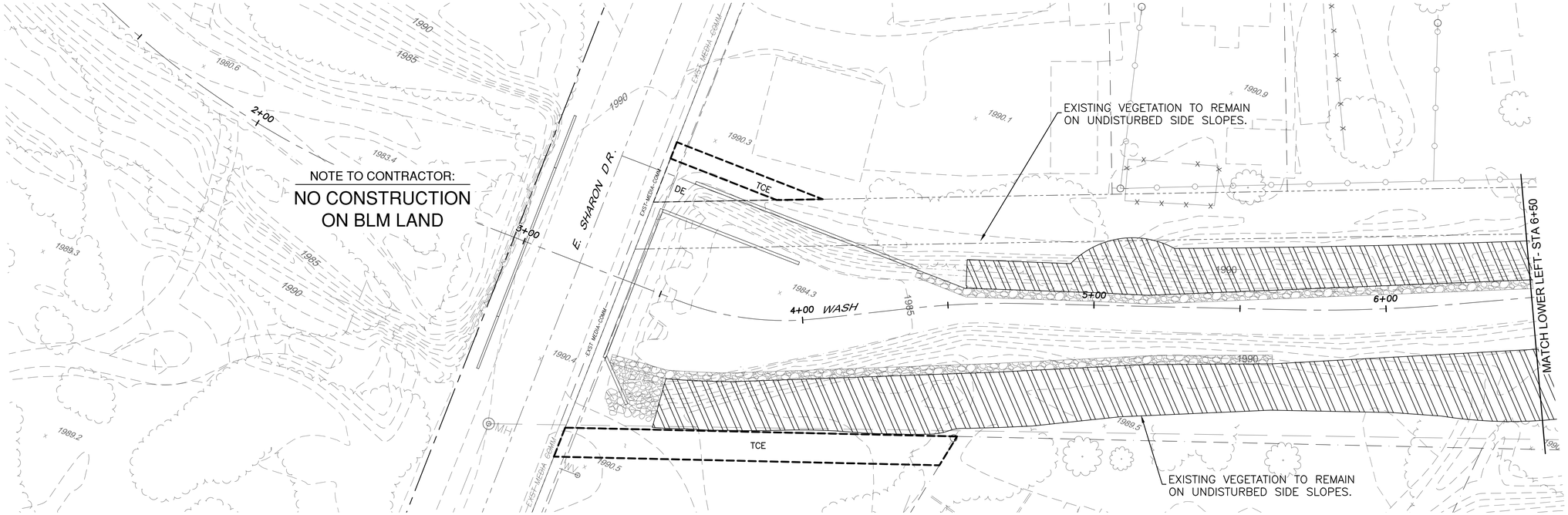

PLAN
SCALE: 1" = 20'

PLANT_SCHEDULE_L17

REVEGETATION	BOTANICAL NAME / COMMON NAME
	Revegetation Mix Type ii See Specs For Rates and Species
	RIP-RAP
	Parkinsonia Microphyllum / Palo Verde 24" Box, 1.5" Cal, 9` Ht. x 6` Spd
	Ferocachis Wislizeni/Barrel Cactus Note: Salvaged Plants From Demolition Shall be Replanted in Overbank Areas (Top of Slope), Distributed Throughout Project Area.
	Opuntia/Prickly Pear (Salvage During Demolition)

NOTE
CONTRACTOR TO OBTAIN WARRANTY ON TREES AND PROVIDE COPIES TO PINAL COUNTY PRIOR TOACCEPTENCE

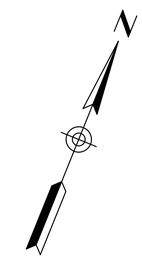

20 0 20 40 60
Horiz. Scale: 1"=20'

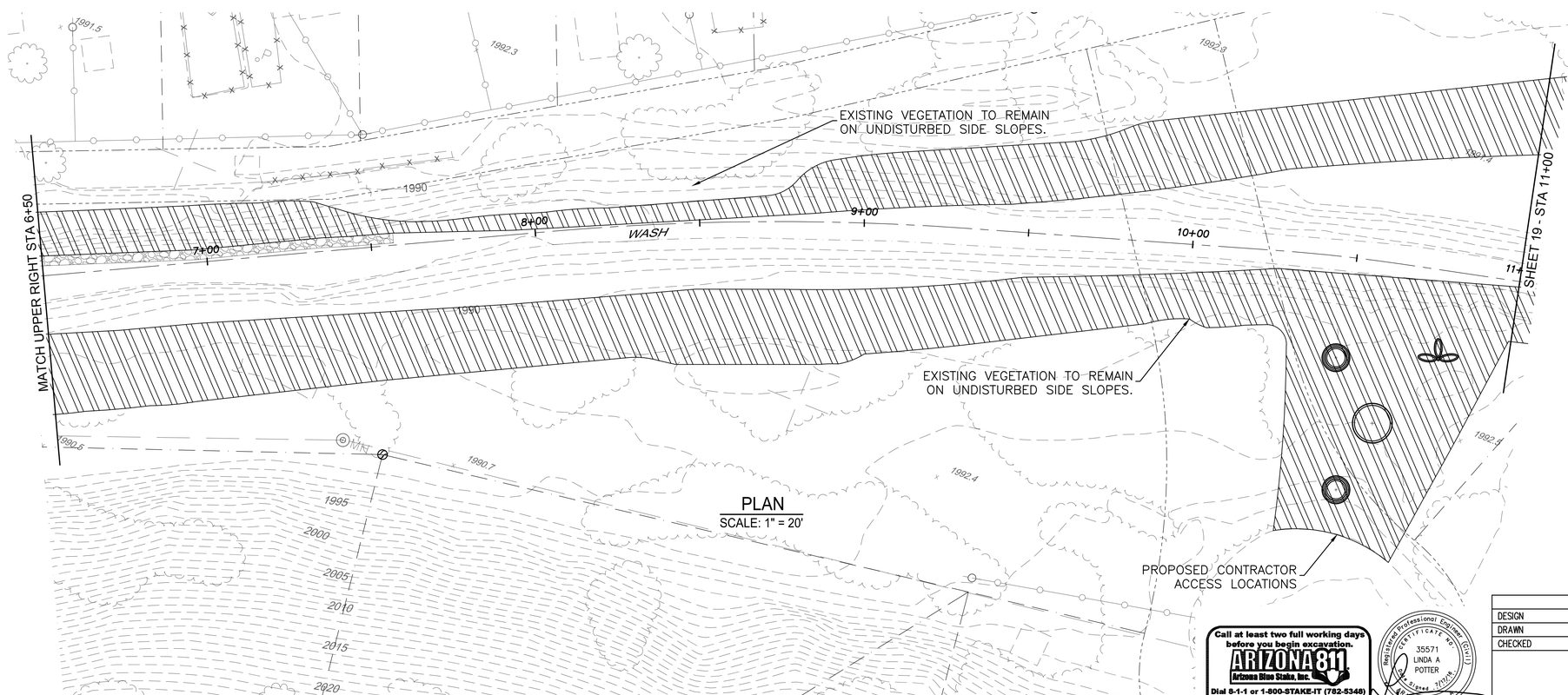

PLAN
SCALE: 1" = 20'

NOTES
1. LOOSEN WIRE TIES AS TREE GROWS.
2. REMOVE STAKES AS SOON AS POSSILE

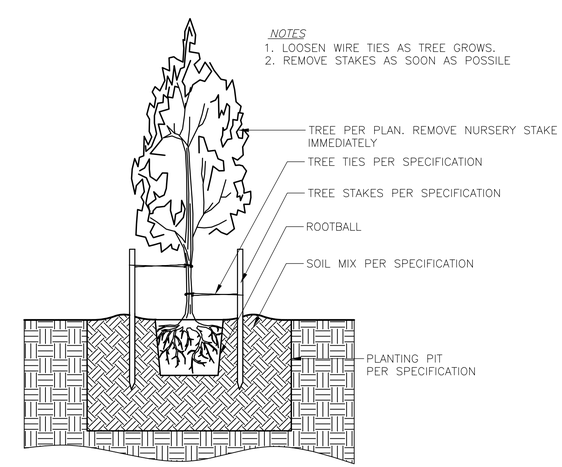

1 TREE PLANTING
NOT TO SCALE AS-07-02

Call at least two full working days before you begin excavation.
ARIZONA 811
Arizona Blue Stake, Inc.
Dial 8-1-1 or 1-800-STAKE-IT (782-5348)
In Maricopa County: (602) 263-1100

Registered Professional Engineer (Civil)
CERTIFICATE NO. 35571
LINDA A. POTTER
Date Signed 7/17/16
ARIZONA U.S.A.
EXPIRES 12-31-2018

	NAME	DATE
DESIGN	LAP	12/2015
DRAWN	GGP	12/2015
CHECKED	LAP	12/2015

ATKINS

CHANNEL IMPROVEMENTS
LANDSCAPE PLAN

LOCATION
Queen Valley Flood Mitigation Project, Phase II

19

DRAWING NO: LP_01

X:\100031696 (Pinal Co Queen Valley)\CADD\Sharon Drive\19-20_Landscape.dwg Layout: LP 01 Jul 20, 2016 - 3:41pm

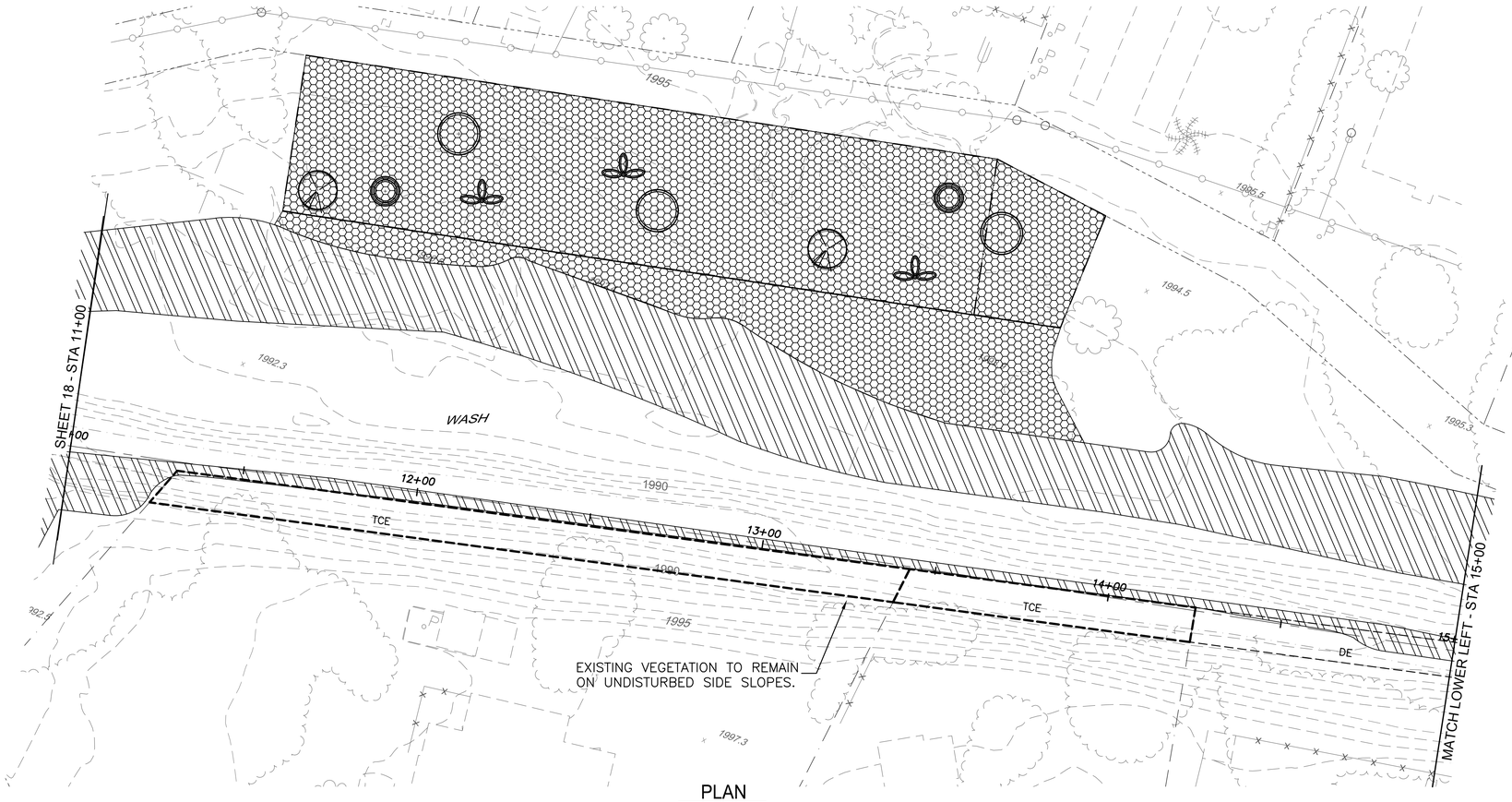

PLAN
SCALE: 1" = 20'

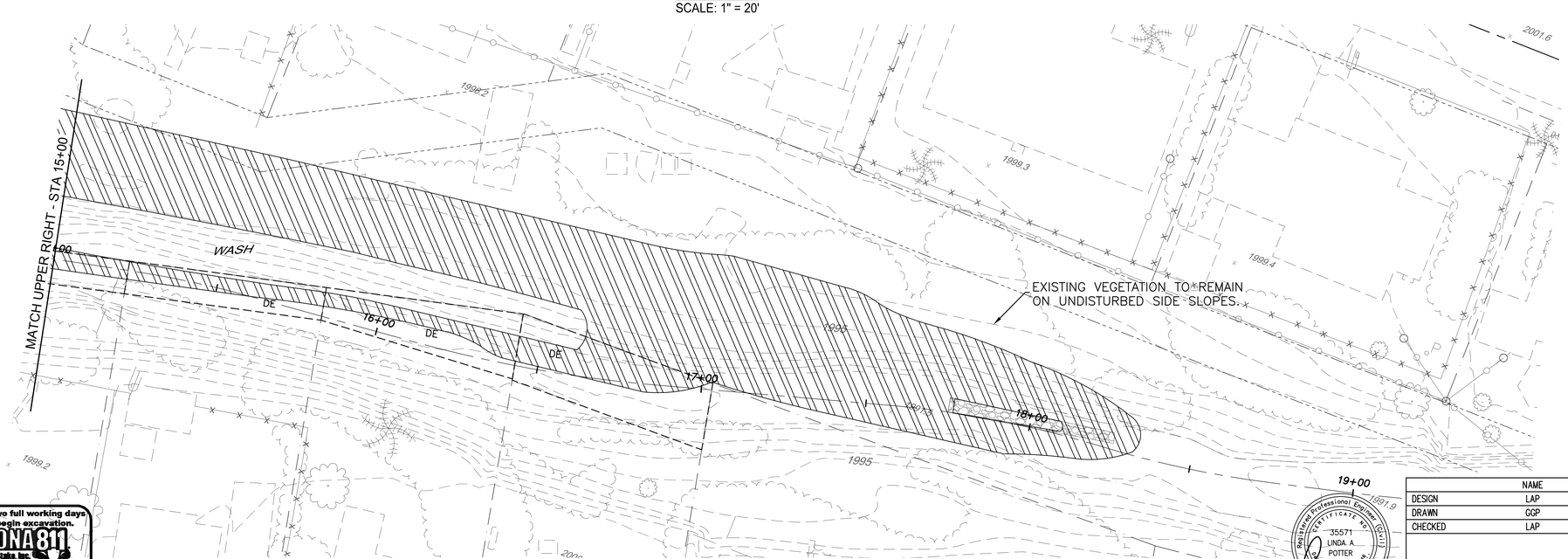

PLAN
SCALE: 1" = 20'

PLANT_SCHEDULE_L17

REVEGETATION	BOTANICAL NAME / COMMON NAME
	Revegetation Mix Type II See Specs for Rates and Species
	Revegetation Mix Type III See Specs for Rates and Species
	RIP-RAP
	Parkinsonia microphyllum / Palo Verde 24"box, 1.5"Cal, 9` Ht. x 6` Spd
	Chilopsis linearis / Desert Willow 24"box, 1.25"Cal, 7` Ht. x 4` Spd.
	Ferocachis Wislizeni/Barrel Cactus Note: Salvaged Plants From Demolition Shall be Replanted in Overbank Areas (Top of Slope), Distributed Throughout Project Area.
	Opuntia/Prickly Pear (Salvage During Demolition)

NOTE
CONTRACTOR TO OBTAIN WARRANTY ON TREES AND PROVIDE COPIES TO PINAL COUNTY PRIOR TOACCEPTENCE

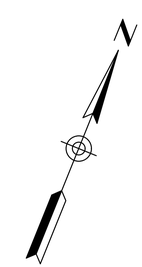

20 0 20 40 60
Horiz. Scale: 1"=20'

Call at least two full working days before you begin excavation.
ARIZONA 811
Arizona Blue Stake, Inc.
Dial 8-1-1 or 1-800-STAKE-IT (782-5348)
in Maricopa County: (602) 263-1100

Registered Professional Engineer (Civil)
CERTIFICATE NO. 35571
LINDA A. POTTER
Date Signed 7/17/16
ARIZONA U.S.A.
EXPIRES 12-31-2018

	NAME	DATE
DESIGN	LAP	12/2015
DRAWN	GGP	12/2015
CHECKED	LAP	12/2015

ATKINS

CHANNEL IMPROVEMENTS
LANDSCAPE PLAN

LOCATION
Queen Valley Flood Mitigation Project, Phase II

20

DRAWING NO: LP_02

X:\100031696 (Pinal Co Queen Valley)\CADD\Sharon Drive\19-20_Landscape.dwg Layout: LP 02 Jul 20, 2016 - 3:41pm