Queen valley 696

Structural Design Calculations
RCB Pipe Supports

Prepared for:

Pinal County, Arizona

Prepared by:

ATKINS
2270 Corporate Circle, Suite 200
Henderson, Nevada 89074-6382

Project No. 100031696

July, 2015

Subject: Pinal Co. Queen Valley 696 Pipe Supports		
Comp by: JC	Date: 07/20/15	Sheet Number: 1
Check by:	Job Number: 100031696	

ATKINS

Pipe support brackets will be attached to the walls and spaced at 10'-8" on centers

Loads

Water	13.4 lbs/ft
6" Ductile Iron Pipe	31.6 lbs/ft
12" Steel Casing	49.6 lbs/ft
	94.6 lbs/ft

Steel Casing

$$M = \frac{1}{8} \times 94.6 \times \overline{10.67}^2 = 1346 \text{ lb.ft}$$

$$S_{req} = 1346 \times 12 / 0.6 \times 35000 = 0.769 \text{ in}^3$$

$$S_{provid} = 43.8 \text{ in}^3 >> S_{req'd} = 0.769$$

Use 12" Std. Pipe A53 Grade B

Brackets

$$V = 94.6 \times 10.67 = 1009 \text{ lbs}$$

Use Tolco B30066-1 (Design Load = 1500 lbs)

Subject: Pinal Co. Queen Valley 696 Pipe Supports		
Comp by: JC	Date: 07/20/15	Sheet Number: 2
Check by:	Job Number: 100031696	

ATKINS

Anchor Bolts

Bracket Holes are provided for up to 3/4" bolts (13/16" Holes)

Design for Max. Load of 1500 lbs

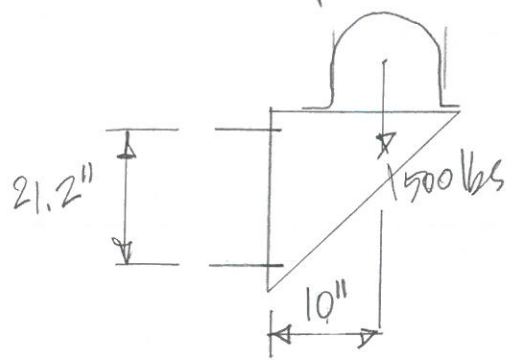

$M = 1500 \times 10'' = 15000$ lb·in

$V = 1500$ lbs

Loads on upper bolt

$T = 15000/21.2 = 708$ lbs

$V = 1500/2 = 750$ lbs

Refer to SIMPSON anchor bolt Design pages

Subject: Pinal Co. Queen Valley 696 Pipe Supports Details		ATKINS
Comp by: JC	Date: 07/20/15	Sheet Number: 3
Check by:	Job Number: 100031696	

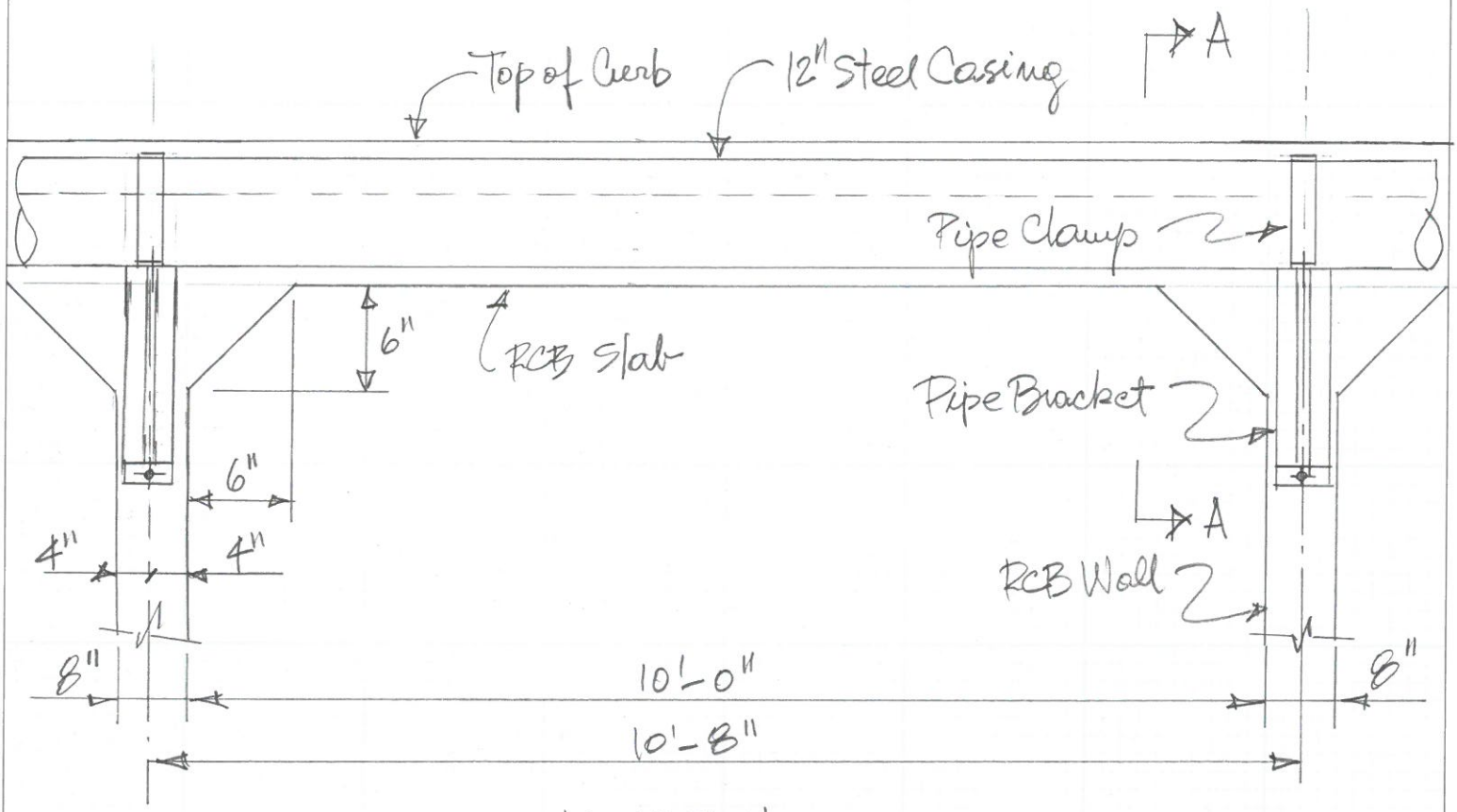

ELEVATION

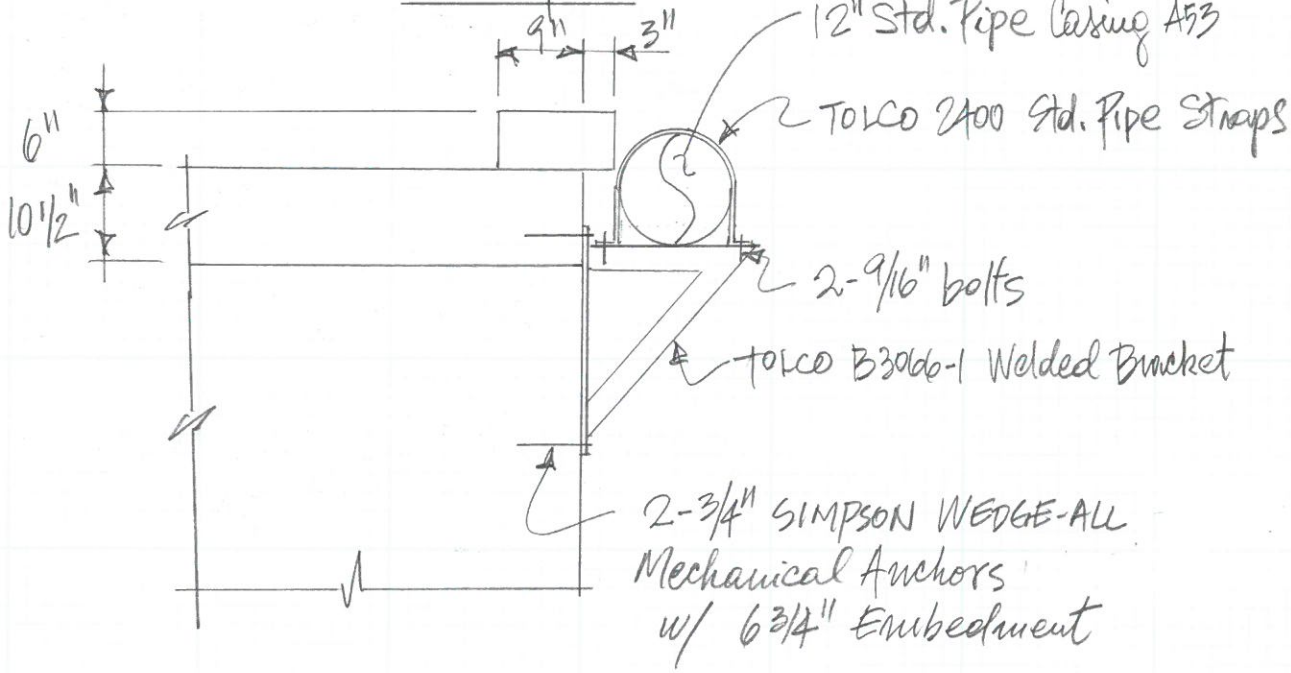

SECTION A-A

SHOPPING CART(0) | LOGIN

BUY ON-LINE OR CALL 1-800-827-5275 OR 262-692-2416

HOME CATALOG PRODUCT GUIDE PIPE SPECS INSTRUCTIONS CASE STUDY CONTRACTORS CONTACT ABOUT

Login

EMAIL PETERSEN

Cart (0 items) | Total

Continue Shopping

Checkout

CLICK A CATEGORY

- **Accessories and Fittings**
- **Annular Seals**
- **Custom Inflatable**
  - Annular Seals
  - Bladders
  - Duct Balloons
- **Drain and Sewer Cleaning Tools**
- **Duct Balloons**
- **Hot Tap Systems**
  - Pipe Plug Hot Tap Insertion Systems
  - Completion Plugs
  - Hot Tap Sleeves
  - Hot Tap Tools
- **Lifting Bags and Cylinders**
  - 145 / 116 PSI Heavy Duty Lifting
  - High Lift Lifting Bags
  - 116 PSI Flat Form Lifting
  - Inflatable Lifting Cylinder
- **Manhole Tools**
- **Packer/Carrier**
- **Pipe Plugs and Stoppers**
  - Inflatable Plug
  - Mechanical Plug
  - Hot Tap Insertion Systems
  - Accessories
- **Pressure & Temperature (Pete's Plugs)**
  - 310-Series T&P Plug
  - 311-Series Pete's T&P Plug
- **Test Equipment**
  - Leak Pressure Testing
  - Vacuum Testers
  - Joint Testers
  - High Pressure Test Pumps
  - Standard Pressure Test Pumps
  - Stringers & Ventilators
  - Smoke Testers
  - Deflection Gauges

ISO Certificate

TESTIMONIAL

The successes we both have had in designing and building equipment to meet the special requirements of our customers has been very rewarding. I appreciate everything you have done to make this possible. The personal relationship we have developed has been very important and meaningful to me. I have very high regard for your analytical and problem solving ability in

Cement-Line Ductile Iron Thickness Class

Select Mechanical or Inflatable Pipe Plugs based on the below pipe ID and along with the pressure to be blocked

(PETERSEN DOES NOT SELL PIPE)

Diameters, Circumferences and Areas for Thickness Class Ductile Iron Standard Cement-Lined Pipe

Nominal Size Inches	Outside Diameter Inches	Inside Diameter Inches
3	3.96	3.33
4	4.80	4.15
6	6.90	6.27
8	9.05	8.38
10	11.10	10.39
12	13.20	12.45
14	15.30	14.45
16	17.40	16.53
18	19.50	18.61
20	21.60	20.69
24	25.80	24.85
30	32.00	30.97
36	38.30	37.19
42	44.50	43.31
48	50.80	49.53
54	57.56	56.17

*Based on ductile iron pipe class 50 nominal thickness for all sizes - except class 51 nominal thickness for 3" and 4" - as specified in awwa c151, and on standard cement lining minimum thickness specified in awwa c104. The value of pi (Π) used in calculations = 3.1416.

Weights For Pipeline Design

Weight Of Thickness Class Ductile Iron Pipe And Contained Water

Thickness Class	Nominal Size Inches	Gallons Held (Per Foot)	Pipe (Pounds Per Foot)	Water (Pounds Per Foot)	Total (Pounds Per Foot)
51	3	0.45	10.1	3.8	13.9
51	4	0.70	12.7	5.9	18.6
50	6	1.60	18.2	13.4	31.6
50	8	2.86	25.8	23.9	49.7
50	10	4.40	33.9	36.7	70.6
50	12	6.32	43.2	52.7	95.9
50	14	8.51	55.1	71.1	126.2
50	16	11.14	64.7	93.0	157.7
50	18	14.12	74.5	117.9	192.4
50	20	17.45	84.8	145.7	230.5
50	24	25.17	106.6	210.1	316.7
50	30	39.10	139.3	326.4	465.7
50	36	56.38	182.6	740.7	653.3
50	42	76.46	229.8	638.3	868.1
50	48	100.00	828.7	834.8	1117.5
50	54	128.61	351.1	1056.2	1407.3

These weights are based on minimum class (thickness class 51 for 3" and 4" and class 50 for 6" through 54") ductile iron pipe with minimum thickness standard cement lining as specified in awwa c104 and on weight of water of 62.4 Pounds per cubic foot. The inside diameters are as given in table 1.

The content in this website may be used but with no warranty or liability. This information is believed to be correct but should always be double checked with alternative sources. Strictly adhere to and follow all applicable national and local regulations and practices.

Tioga™

Philadelphia Regional Center
2450 Wheatsheaf Lane
Philadelphia, PA 19137
O 215-831-0700
F 215-533-1645
E sales@tiogapipe.com

Houston Regional Center
616 FM 1960 W, Suite 700
Houston, TX 77090
O 713-433-2111
F 281-397-0132
E sales@tiogapipe.com

Chattanooga Regional Center
1301 Riverfront Parkway, Suite 108
Chattanooga, TN 37402
O 423-899-3398
F 423-899-9695
E sales@tiogapipe.com

PIPE DIMENSIONS AND WEIGHTS

Available in commercial and nuclear

U.S./METRIC

NOMINAL PIPE SIZE	OD	SCHEDULE DESIGNATIONS			WALL THICKNESS		WEIGHT		ID	
INCH MM	INCH MM	ASME			INCH	MM	LBS/ FOOT	KG/ METER	INCH	MM
1/8	0.405	10		10S	0.049	1.24	0.19	0.28	0.307	7.82
6	10.3	STD	40	40S	0.068	1.73	0.24	0.37	0.269	6.84
		XS	80	80S	0.095	2.41	0.31	0.47	0.215	5.84
1/4	0.540	10		10S	0.065	1.65	0.33	0.49	0.410	10.40
8	13.7	STD	40	40S	0.088	2.24	0.43	0.63	0.364	9.22
		XS	80	80S	0.119	3.02	0.54	0.80	0.302	7.66
3/8	0.675	10		10S	0.065	1.65	0.42	0.63	0.545	13.80
10	17.1	STD	40	40S	0.091	2.31	0.57	0.84	0.493	12.48
		XS	80	80S	0.126	3.20	0.74	1.10	0.423	10.70
1/2	0.840	5		5S	0.065	1.65	0.54	0.80	0.710	18.00
15	21.3	10		10S	0.083	2.11	0.67	1.00	0.674	17.08
		STD	40	40S	0.109	2.77	0.85	1.27	0.622	15.76
		XS	80	80S	0.147	3.73	1.09	1.62	0.546	13.84
		160			0.188	4.78	1.31	1.95	0.464	11.74
		XX			0.294	7.47	1.72	2.55	0.252	6.36
3/4	1.050	5		5S	0.065	1.65	0.69	1.03	0.920	23.40
20	26.7	10		10S	0.083	2.11	0.86	1.28	0.884	22.48
		STD	40	40S	0.113	2.87	1.13	1.69	0.824	20.96
		XS	80	80S	0.154	3.91	1.48	2.20	0.742	18.88
		160			0.219	5.56	1.95	2.90	0.612	15.58
		XX			0.308	7.82	2.44	3.64	0.434	11.06
1	1.315	5		5S	0.065	1.65	0.87	1.29	1.185	30.10
25	33.4	10		10S	0.109	2.77	1.41	2.09	1.097	27.86
		STD	40	40S	0.133	3.38	1.68	2.50	1.049	26.64
		XS	80	80S	0.179	4.55	2.17	3.24	0.957	24.30
		160			0.250	6.35	2.85	4.24	0.815	20.70
		XX			0.358	9.09	3.66	5.45	0.599	15.22
1-1/4	1.660	5		5S	0.065	1.65	1.11	1.65	1.530	38.90
32	42.2	10		10S	0.109	2.77	1.81	2.69	1.442	36.66
		STD	40	40S	0.140	3.56	2.27	3.39	1.380	35.08
		XS	80	80S	0.191	4.85	3.00	4.47	1.278	32.50
		160			0.250	6.35	3.77	5.61	1.160	29.50
		XX			0.382	9.70	5.22	7.77	0.896	22.80
1-1/2	1.900	5		5S	0.065	1.65	1.28	1.90	1.770	45.00
40	48.3	10		10S	0.109	2.77	2.09	3.11	1.682	42.76
		STD	40	40S	0.145	3.68	2.72	4.05	1.610	40.94
		XS	80	80S	0.200	5.08	3.63	5.41	1.500	38.14
		160			0.281	7.14	4.86	7.25	1.338	34.02
		XX			0.400	10.15	6.41	9.55	1.100	28.00
2	2.375	5		5S	0.065	1.65	1.61	2.39	2.245	57.00
50	60.3	10		10S	0.109	2.77	2.64	3.93	2.157	54.76
		STD	40	40S	0.154	3.91	3.66	5.44	2.067	52.48
		XS	80	80S	0.218	5.54	5.03	7.48	1.939	49.22
		160			0.344	8.74	7.47	11.11	1.687	42.82
		XX			0.436	11.07	9.04	13.44	1.503	38.16
2-1/2	2.875	5		5S	0.083	2.11	2.48	3.69	2.709	68.78
65	73.0	10		10S	0.120	3.05	3.53	5.26	2.635	66.90
		STD	40	40S	0.203	5.16	5.80	8.63	2.469	62.68
		XS	80	80S	0.276	7.01	7.67	11.41	2.323	58.98
		160			0.375	9.53	10.02	14.92	2.125	53.94
		XX			0.552	14.02	13.71	20.39	1.771	44.96
3	3.500	5		5S	0.083	2.11	3.03	4.52	3.334	84.68
80	88.9	10		10S	0.120	3.05	4.34	6.46	3.260	82.80
		STD	40	40S	0.216	5.49	7.58	11.29	3.068	77.92
		XS	80	80S	0.300	7.62	10.26	15.27	2.900	73.66
		160			0.438	11.13	14.34	21.35	2.624	66.64
		XX			0.600	15.24	18.60	27.68	2.300	58.42
3-1/2	4.000	5		5S	0.083	2.11	3.48	5.18	3.834	97.38
90	101.6	10		10S	0.120	3.05	4.98	7.41	3.760	95.50
		STD	40	40S	0.226	5.74	9.12	13.57	3.548	90.12
		XS	80	80S	0.318	8.08	12.52	18.64	3.364	85.44
		XX			0.636	16.15	22.87	34.03	2.728	69.30
4	4.500	5		5S	0.083	2.11	3.92	5.84	4.334	110.08
100	114.3	10		10S	0.120	3.05	5.62	8.37	4.260	108.20
					0.156	3.96	7.24	10.78	4.188	106.38
					0.188	4.78	8.67	12.91	4.124	104.74
		STD	40	40S	0.237	6.02	10.80	16.08	4.026	102.26
		XS	80	80S	0.337	8.56	15.00	22.32	3.826	97.18
		120			0.438	11.13	19.02	28.32	3.624	92.04
		160			0.531	13.49	22.53	33.54	3.438	87.32
		XX			0.674	17.12	27.57	41.03	3.152	80.06
4-1/2	5.000	STD	40	40S	0.247	6.27	12.55	18.67	4.506	114.46
115	127.0	XS	80	80S	0.355	9.02	17.63	26.24	4.290	108.96
		XX			0.710	18.03	32.56	48.45	3.580	90.94

NOMINAL PIPE SIZE	OD	SCHEDULE DESIGNATIONS			WALL THICKNESS		WEIGHT		ID	
INCH MM	INCH MM	ASME			INCH	MM	LBS/ FOOT	KG/ METER	INCH	MM
5	5.563	5		5S	0.109	2.77	6.36	9.46	5.345	135.76
125	141.3	10		10S	0.134	3.40	7.78	11.56	5.295	134.50
		STD	40	40S	0.258	6.55	14.63	21.77	5.047	128.20
		XS	80	80S	0.375	9.53	20.80	30.97	4.813	122.24
		120			0.500	12.70	27.06	40.28	4.563	115.90
		160			0.625	15.88	32.99	49.12	4.313	109.54
		XX			0.750	19.05	38.59	57.43	4.063	103.20
6	6.625	5		5S	0.109	2.77	7.59	11.31	6.407	162.76
150	168.3	10		10S	0.134	3.40	9.30	13.83	6.357	161.50
					0.188	4.78	12.94	19.28	6.249	158.74
		STD	40	40S	0.280	7.11	18.99	28.26	6.065	154.08
		XS	80	80S	0.432	10.97	28.60	42.56	5.761	146.36
		120			0.562	14.27	36.43	54.21	5.501	139.76
		160			0.719	18.26	45.39	67.57	5.187	131.78
		XX			0.864	21.95	53.21	79.22	4.897	124.40
7	7.625	STD	40	40S	0.301	7.65	23.57	35.10	7.023	178.40
175	193.7	XS	80	80S	0.500	12.70	38.08	56.69	6.625	168.30
		XX			0.875	22.23	63.14	94.00	5.875	149.24
8	8.625			5S	0.109	2.77	9.92	14.78	8.407	213.56
200	219.1	10		10S	0.148	3.76	13.41	19.97	8.329	211.58
		20			0.250	6.35	22.38	33.32	8.125	206.40
		30			0.277	7.04	24.72	36.82	8.071	205.02
		STD	40	40S	0.322	8.18	28.58	42.55	7.981	202.74
		60			0.406	10.31	35.67	53.09	7.813	198.48
		XS	80	80S	0.500	12.70	43.43	64.64	7.625	193.70
		100			0.594	15.09	51.00	75.92	7.437	188.92
		120			0.719	18.26	60.77	90.44	7.187	182.58
		140			0.812	20.62	67.82	100.93	7.001	177.86
		XX			0.875	22.23	72.49	107.93	6.875	174.64
		160			0.906	23.01	74.76	111.27	6.813	173.08
9	9.625	STD	40	40S	0.342	8.69	33.94	50.54	8.941	227.12
225	244.5	XS	80	80S	0.500	12.70	48.77	72.60	8.625	219.10
		XX			0.875	22.23	81.85	121.85	7.875	200.04
10	10.750			5S	0.134	3.40	15.21	22.61	10.482	266.20
250	273.0			10S	0.165	4.19	18.67	27.78	10.420	264.62
					0.188	4.78	21.23	31.62	10.374	263.44
		20			0.250	6.35	28.06	41.76	10.250	260.30
		30			0.307	7.80	34.27	51.01	10.136	257.40
		STD	40	40S	0.365	9.27	40.52	60.29	10.020	254.46
		XS	60	80S	0.500	12.70	54.79	81.53	9.750	247.60
		80			0.594	15.09	64.49	95.98	9.562	242.82
		100			0.719	18.26	77.10	114.71	9.312	236.48
		120			0.844	21.44	89.38	133.01	9.062	230.12
		140	XX		1.000	25.40	104.23	155.10	8.750	222.20
		160			1.125	28.58	115.75	172.27	8.500	215.84
11	11.750	STD	40	40S	0.375	9.53	45.60	67.91	11.000	279.44
275	298.5	XS	80	80S	0.500	12.70	60.13	89.51	10.750	273.10
		XX			0.875	22.23	101.72	151.46	10.000	254.04
12	12.750			5S	0.156	3.96	21.00	31.24	12.438	315.88
300	323.8			10S	0.180	4.57	24.19	35.98	12.390	314.66
					0.188	4.78	25.25	37.61	12.374	314.24
		20			0.250	6.35	33.41	49.71	12.250	311.10
		30			0.330	8.38	43.81	65.19	12.090	307.04
		STD		40S	0.375	9.53	49.61	73.86	12.000	304.74
		40			0.406	10.31	53.57	79.71	11.938	303.18
		XS		80S	0.500	12.70	65.48	97.44	11.750	298.40
		60			0.562	14.27	73.22	108.93	11.626	295.26
		80			0.688	17.48	88.71	132.05	11.374	288.84
		100			0.844	21.44	107.42	159.87	11.062	280.92
		120	XX		1.000	25.40	125.61	186.92	10.750	273.00
		140			1.125	28.58	139.81	208.08	10.500	266.64
		160			1.312	33.32	160.42	238.69	10.126	257.16
14	14.000			10S	0.188	4.78	27.76	41.36	13.624	346.04
350	355.6	10			0.250	6.35	36.75	54.69	13.500	342.90
		20			0.312	7.92	45.65	67.91	13.376	339.76
		STD	30	40S	0.375	9.53	54.62	81.33	13.250	336.54
		40			0.438	11.13	63.50	94.55	13.124	333.34
		XS		80S	0.500	12.70	72.16	107.40	13.000	330.20
		60			0.594	15.09	85.13	126.72	12.812	325.42
		80			0.750	19.05	106.23	158.11	12.500	317.50
		100			0.938	23.83	130.98	194.98	12.124	307.94
		120			1.094	27.79	150.93	224.66	11.812	300.02
		140			1.250	31.75	170.37	253.58	11.500	292.10
		160			1.406	35.71	189.29	281.72	11.188	284.18

B2400 - Standard Pipe Strap (TOLCO Fig. 2STR)

Size Range: 1/2" (15mm) thru 24" (600mm) pipe

Material: Steel

Function: Designed for supporting pipe runs from strut supports.

Approvals: Underwriters Laboratories Listed for B2400-3/4" thru B2400-8". Conforms to Federal Specification WW-H-171E & A-A-1192A, Type 26 and Manufacturers Standardization Society ANSI/MSS SP-69 & SP-58, Type 26.

Finish: Electro-Galvanized. Contact B-Line for alternative finishes and materials.

Order By: Part number, pipe size and finish

Note: Ductile iron sizes available.
Special "B" dimensions available on request, consult factory.

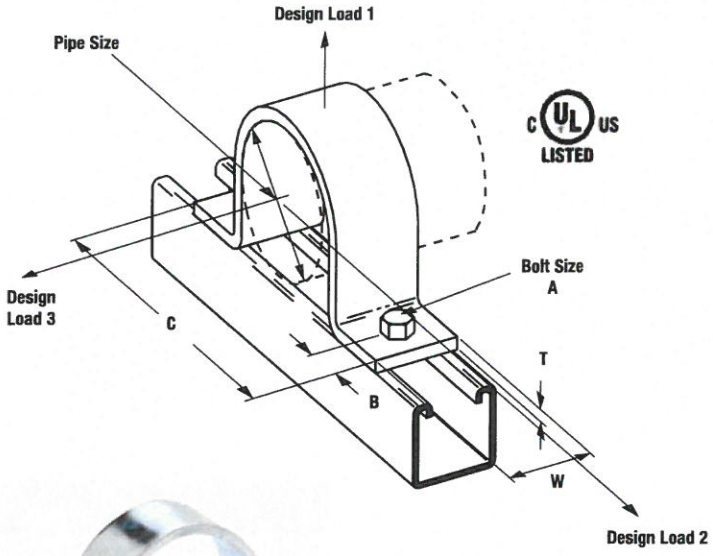

Part No.	Pipe Size		A		B		C		T		W	
	in.	(mm)	in.	(mm)	in.	(mm)	in.	(mm)	in.	(mm)	in.	(mm)
B2400-1/2	1/2"	(15)	5/16"	(7.9)	7/16"	(11.1)	2 13/16"	(71.4)	10 Ga.	(3.4)	1 5/8"	(41.3)
B2400-3/4	3/4"	(20)	5/16"	(7.9)	7/16"	(11.1)	3"	(76.2)	10 Ga.	(3.4)	1 5/8"	(41.3)
B2400-1	1"	(25)	5/16"	(7.9)	7/16"	(11.1)	3 17/32"	(89.7)	10 Ga.	(3.4)	1 5/8"	(41.3)
B2400-1 1/4	1 1/4"	(32)	5/16"	(7.9)	7/16"	(11.1)	3 3/4"	(95.2)	10 Ga.	(3.4)	1 5/8"	(41.3)
B2400-1 1/2	1 1/2"	(40)	5/16"	(7.9)	7/16"	(11.1)	4 1/16"	(103.2)	10 Ga.	(3.4)	1 5/8"	(41.3)
B2400-2	2"	(50)	7/16"	(11.1)	11/16"	(17.4)	5 21/32"	(143.6)	1/4"	(6.3)	1 5/8"	(41.3)
B2400-2 1/2	2 1/2"	(65)	7/16"	(11.1)	11/16"	(17.4)	6 5/32"	(156.3)	1/4"	(6.3)	1 5/8"	(41.3)
B2400-3	3"	(80)	7/16"	(11.1)	11/16"	(17.4)	6 25/32"	(172.2)	1/4"	(6.3)	1 5/8"	(41.3)
B2400-3 1/2	3 1/2"	(90)	7/16"	(11.1)	11/16"	(17.4)	7 9/32"	(184.9)	1/4"	(6.3)	1 5/8"	(41.3)
B2400-4	4"	(100)	9/16"	(14.3)	11/16"	(17.4)	7 25/32"	(197.6)	1/4"	(6.3)	1 5/8"	(41.3)
B2400-5	5"	(125)	9/16"	(14.3)	11/16"	(17.4)	8 7/8"	(225.4)	1/4"	(6.3)	1 5/8"	(41.3)
B2400-6	6"	(150)	9/16"	(14.3)	11/16"	(17.4)	9 15/16"	(252.4)	1/4"	(6.3)	1 5/8"	(41.3)
B2400-8	8"	(200)	9/16"	(14.3)	11/16"	(17.4)	11 31/32"	(304.0)	1/4"	(6.3)	1 5/8"	(41.3)
B2400-10	10"	(250)	9/16"	(14.3)	11/16"	(17.4)	14"	(355.6)	1/4"	(6.3)	1 5/8"	(41.3)
B2400-12	12"	(300)	9/16"	(14.3)	11/16"	(17.4)	16"	(406.4)	1/4"	(6.3)	1 5/8"	(41.3)
B2400-14	14"	(350)	15/16"	(23.8)	1 5/16"	(33.3)	20 3/8"	(517.5)	3/8"	(9.5)	1 3/4"	(44.4)
B2400-16	16"	(400)	15/16"	(23.8)	1 5/16"	(33.3)	22 3/8"	(568.3)	3/8"	(9.5)	1 3/4"	(44.4)
B2400-18	18"	(450)	15/16"	(23.8)	1 5/16"	(33.3)	26 1/8"	(663.6)	1/2"	(12.7)	1 3/4"	(44.4)
B2400-20	20"	(500)	15/16"	(23.8)	1 5/16"	(33.3)	28 1/8"	(714.4)	1/2"	(12.7)	1 3/4"	(44.4)
B2400-24	24"	(600)	15/16"	(23.8)	1 5/16"	(33.3)	32 1/8"	(816.0)	1/2"	(12.7)	1 3/4"	(44.4)

B2400 - Standard Pipe Strap (TOLCO Fig. 2STR) Cont.

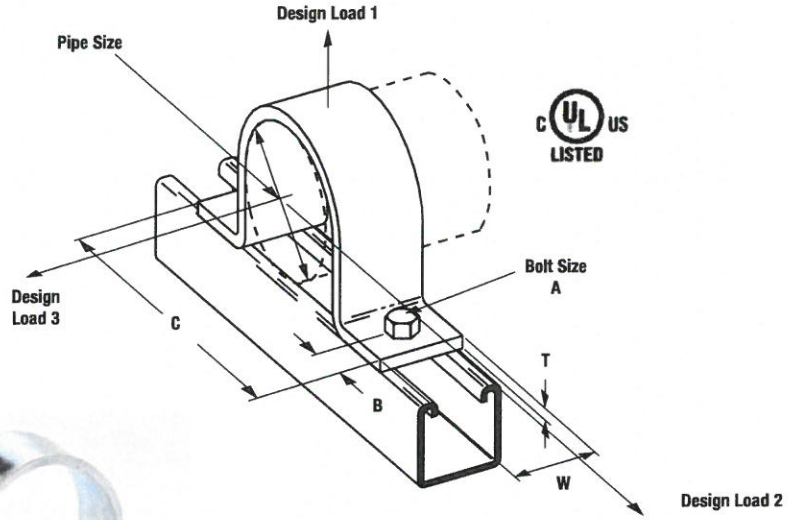

Part No.	Design Load 1		Design Load 2		Design Load 3		Approx. Wt./100	
	Lbs.	(kN)	Lbs.	(kN)	Lbs.	(kN)	Lbs.	(kg)
B2400-1/2	600	(2.67)	150	(.67)	105	(.47)	23	(10.4)
B2400-3/4	600	(2.67)	150	(.67)	105	(.47)	26	(11.8)
B2400-1	600	(2.67)	150	(.67)	120	(.53)	31	(14.0)
B2400-1 1/4	600	(2.67)	150	(.67)	120	(.53)	36	(16.3)
B2400-1 1/2	600	(2.67)	150	(.67)	120	(.53)	39	(17.7)
B2400-2	1200	(5.34)	480	(2.14)	180	(.80)	93	(42.2)
B2400-2 1/2	1200	(5.34)	480	(2.14)	180	(.80)	106	(48.1)
B2400-3	1200	(5.34)	480	(2.14)	300	(1.33)	132	(59.9)
B2400-3 1/2	1200	(5.34)	480	(2.14)	300	(1.33)	151	(68.5)
B2400-4	1500	(6.67)	600	(2.67)	450	(2.00)	160	(72.6)
B2400-5	1500	(6.67)	600	(2.67)	450	(2.00)	192	(87.1)
B2400-6	1500	(6.67)	600	(2.67)	450	(2.00)	219	(99.3)
B2400-8	2000	(8.90)	800	(3.56)	600	(2.67)	297	(134.7)
B2400-10	2000	(8.90)	800	(3.56)	600	(2.67)	465	(210.9)
B2400-12	2000	(8.90)	800	(3.56)	600	(2.67)	560	(254.0)
B2400-14	2000	(8.90)	800	(3.56)	600	(2.67)	761	(345.2)
B2400-16	2000	(8.90)	800	(3.56)	600	(2.67)	861	(390.5)
B2400-18	2000	(8.90)	800	(3.56)	600	(2.67)	1297	(588.3)
B2400-20	2000	(8.90)	800	(3.56)	600	(2.67)	1426	(646.8)
B2400-24	2000	(8.90)	800	(3.56)	600	(2.67)	1682	(762.9)

All dimensions in charts and on drawings are in inches. Dimensions shown in parentheses are in millimeters unless otherwise specified.

Figure B3066 - Welded Bracket - Medium Duty (TOLCO Fig. 30M)

Max. Recommended Load: 1500 lbs. (6.67kN)

Material: Steel

Function: Recommended for supporting pipe on top or hanging through support bracket outward from mounting surface.

Approvals: Conforms to Federal Specification WW-H-171E & A-A-1192A, Type 33 and Manufacturers Standardization Society ANSI/MSS SP-69 & SP-58, Type 32.

Finish: Plain. Contact B-Line for alternative finishes and materials.

Order By: Part number and finish

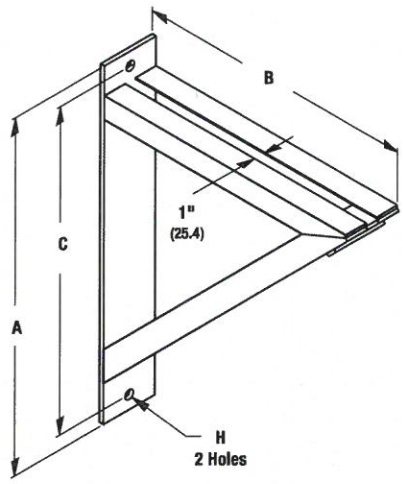

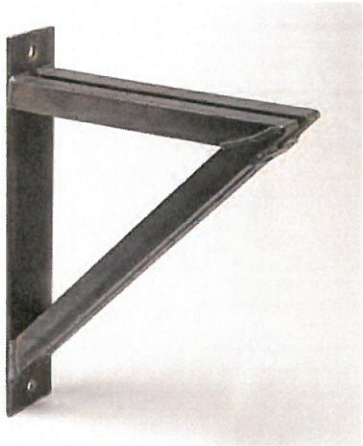

Part No.	Mtg. Hole H in.	Mtg. Hole H (mm)	A in.	A (mm)	B in.	B (mm)	C in.	C (mm)
B3066-0	13/16"	(20.6)	18"	(457.2)	12"	(304.8)	15 1/2"	(393.7)
B3066-1	13/16"	(20.6)	24"	(609.6)	18"	(457.2)	21 1/2"	(546.1)
B3066-2	13/16"	(20.6)	30"	(762.0)	24"	(609.6)	27 1/2"	(698.5)

Part No.	Design Load Lbs.	Design Load (kN)	Approx. Wt./100 Lbs.	Approx. Wt./100 (kg)
B3066-0	1500	(6.67)	1577	(715.3)
B3066-1	1500	(6.67)	2578	(1169.4)
B3066-2	1500	(6.67)	4446	(2016.7)

All dimensions in charts and on drawings are in inches. Dimensions shown in parentheses are in millimeters unless otherwise specified.

Date: 20 July 2005
Job: Pinal Co. Queen Valley 696
Subject: Pipe Supports

GIVEN:

Base Material Type: Normal Weight Concrete
Base Material Mechanical Properties: f'c = 3000 psi
Base Material Temperature: T = NA
Minimum Base Material Thickness = 48 inches
Applied Tension Load per Anchor: Tapplied = 708 lb.
Applied Shear Load per Anchor: Vapplied = 750 lb.

Anchor Spacing:
S1 = 24 inches
S2 = 24 inches
S3 = 21.2 inches

Anchor Edge Distance:
C1 = 4 inches
C2 = 12 inches
C3 = 4 inches
C4 = 48 inches

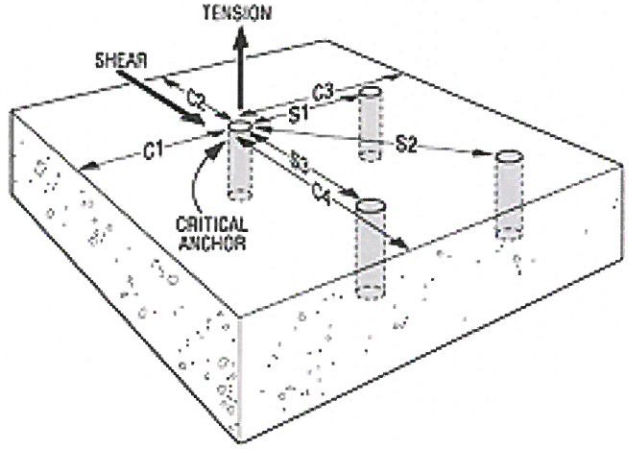

CALCULATIONS:

OPTION 1

Proposed Anchor System = Wedge-All
Anchor Diameter (in.) or Rebar Size = 3/4
Embedment Depth = 5 inches
Temperature Sensitivity Factor: ftemp = 1.00
Load Duration Increase for Seismic/Wind: fduration = 1.00

Allowable Tension:

T = 3225 lb.

Reduced Efficiency Based on Spacing:

fS1 = 0 + [(1 - 0)x(24 - 0)/(7 - 0)] <= 1, fS1 = 1.000
fS2 = 0 + [(1 - 0)x(24 - 0)/(7 - 0)] <= 1, fS2 = 1.000
fS3 = 0 + [(1 - 0)x(21.2 - 0)/(7 - 0)] <= 1, fS3 = 1.000
(fS)tot. = 1.000 x 1.000 x 1.000 = 1.000

Reduced Efficiency Based on Edge/End Distance:

fC1 = 0.70 + [(1 - 0.70)x(4 - 3)/(7.5 - 3)] <= 1, fC1 = 0.7667
fC2 = 0.70 + [(1 - 0.70)x(12 - 3)/(7.5 - 3)] <= 1, fC2 = 1.000
fC3 = 0.70 + [(1 - 0.70)x(4 - 3)/(7.5 - 3)] <= 1, fC3 = 0.7667
fC4 = 0.70 + [(1 - 0.70)x(48 - 3)/(7.5 - 3)] <= 1, fC4 = 1.000
(fC)tot. = 0.7667 x 1.000 x 0.7667 x 1.000 = 0.5878

Tdesign is equal to:

Tdesign = 3225 x 1.000 x 0.5878 x 1.00 x 1.00 = 1896 lb. >=Tapplied, OK

Allowable Shear:

V = 4610 lb.

Reduced Efficiency Based on Spacing:

fS1 = 0 + [(1 - 0)x(24 - 0)/(7 - 0)] <= 1, fS1 = 1.000
fS2 = 0 + [(1 - 0)x(24 - 0)/(7 - 0)] <= 1, fS2 = 1.000
fS3 = 0 + [(1 - 0)x(21.2 - 0)/(7 - 0)] <= 1, fS3 = 1.000
(fS)tot. = 1.000 x 1.000 x 1.000 = 1.000

Reduced Efficiency Based on Edge/End Distance:

fC1 = 0.30 + [(1 - 0.30)x(4 - 3)/(7.5 - 3)] <= 1, fC1 = 0.4556
fC2 = 0.30 + [(1 - 0.30)x(12 - 3)/(7.5 - 3)] <= 1, fC2 = 1.000
fC3 = 0.30 + [(1 - 0.30)x(4 - 3)/(7.5 - 3)] <= 1, fC3 = 0.4556
fC4 = 0.30 + [(1 - 0.30)x(48 - 3)/(7.5 - 3)] <= 1, fC4 = 1.000
(fC)tot. = 0.4556 x 1.000 x 0.4556 x 1.000 = 0.2075

Allowable Shear Value for Design:

Vdesign is equal to:

Vdesign = 4610 x 1.000 x 0.2075 x 1.00 x 1.00 = 957 lb. >=Vapplied, OK

Check Combined Tension & Shear Interaction:

(708/1896)^1.666667 + (750/957)^1.666667 = 0.860203 < or = 1.0 OK

Where n = 5/3 for Carbon/Stainless Steel Wedge-All and Carbon Steel Drop-In anchors installed in Normal Weight Concrete only. Otherwise, n = 1 for all other cases.

CALCULATIONS:

OPTION 2

Proposed Anchor System = Stainless-Steel Wedge-All
Anchor Diameter (in.) or Rebar Size = 3/4
Embedment Depth = 5 inches
Temperature Sensitivity Factor: ftemp = 1.00
Load Duration Increase for Seismic/Wind: fduration = 1.00

Allowable Tension:

T = 2905 lb.

Reduced Efficiency Based on Spacing:

fS1 = 0 + [(1 - 0)x(24 - 0)/(7 - 0)] <= 1, fS1 = 1.000
fS2 = 0 + [(1 - 0)x(24 - 0)/(7 - 0)] <= 1, fS2 = 1.000
fS3 = 0 + [(1 - 0)x(21.2 - 0)/(7 - 0)] <= 1, fS3 = 1.000
(fS)tot. = 1.000 x 1.000 x 1.000 = 1.000

Reduced Efficiency Based on Edge/End Distance:

fC1 = 0.70 + [(1 - 0.70)x(4 - 3)/(7.5 - 3)] <= 1, fC1 = 0.7667
fC2 = 0.70 + [(1 - 0.70)x(12 - 3)/(7.5 - 3)] <= 1, fC2 = 1.000
fC3 = 0.70 + [(1 - 0.70)x(4 - 3)/(7.5 - 3)] <= 1, fC3 = 0.7667
fC4 = 0.70 + [(1 - 0.70)x(48 - 3)/(7.5 - 3)] <= 1, fC4 = 1.000
(fC)tot. = 0.7667 x 1.000 x 0.7667 x 1.000 = 0.5878

Tdesign is equal to:

Tdesign = 2905 x 1.000 x 0.5878 x 1.00 x 1.00 = 1707 lb. >=Tapplied, OK

Allowable Shear:

V = 5300 lb.

Reduced Efficiency Based on Spacing:

fS1 = 0 + [(1 - 0)x(24 - 0)/(7 - 0)] <= 1, fS1 = 1.000
fS2 = 0 + [(1 - 0)x(24 - 0)/(7 - 0)] <= 1, fS2 = 1.000
fS3 = 0 + [(1 - 0)x(21.2 - 0)/(7 - 0)] <= 1, fS3 = 1.000
(fS)tot. = 1.000 x 1.000 x 1.000 = 1.000

Reduced Efficiency Based on Edge/End Distance:

fC1 = 0.30 + [(1 - 0.30)x(4 - 3)/(7.5 - 3)] <= 1, fC1 = 0.4556
fC2 = 0.30 + [(1 - 0.30)x(12 - 3)/(7.5 - 3)] <= 1, fC2 = 1.000
fC3 = 0.30 + [(1 - 0.30)x(4 - 3)/(7.5 - 3)] <= 1, fC3 = 0.4556
fC4 = 0.30 + [(1 - 0.30)x(48 - 3)/(7.5 - 3)] <= 1, fC4 = 1.000
(fC)tot. = 0.4556 x 1.000 x 0.4556 x 1.000 = 0.2075

Allowable Shear Value for Design:

Vdesign is equal to:

Vdesign = 5300 x 1.000 x 0.2075 x 1.00 x 1.00 = 1100 lb. >=Vapplied, OK

Check Combined Tension & Shear Interaction:

(708/1707)^1.666667 + (750/1100)^1.666667 = 0.758811 < or = 1.0 OK

Where n = 5/3 for Carbon/Stainless Steel Wedge-All and Carbon Steel Drop-In anchors installed in Normal Weight Concrete only. Otherwise, n = 1 for all other cases.

Tension Loads for Carbon Steel Wedge-All (and Tie-Wire) Anchors in Normal-Weight Concrete

Size in. (mm)	Embed. Depth in. (mm)	Critical Edge Dist. in. (mm)	Critical Spacing in. (mm)	Tension Load: f'c >= 2000 psi (13.8 MPa) Concrete			Tension Load: f'c >= 3000 psi (20.7 MPa)	Tension Load: f'c >= 4000 psi (27.6 MPa) Concrete			Install. Torque ft-lbs (N-m)
				Ultimate lbs. (kN)	Std. Dev. lbs. (kN)	Allow. lbs. (kN)	Allow. lbs. (kN)	Ultimate lbs. (kN)	Std. Dev. lbs. (kN)	Allow. lbs. (kN)	
1/4[7] (6.4)	1 1/8 (29)	2 1/2 (64)	1 5/8 (41)	680 (3.0)	167 (0.7)	170 (0.8)	205 (0.9)	960 (4.3)	233 (1.0)	240 (1.1)	8 (10.8)
	2 1/4 (57)	2 1/2 (64)	3 1/8 (79)	1,920 (8.5)	286 (1.3)	480 (2.1)	530 (2.4)	2,320 (10.3)	105 (0.5)	580 (2.6)	
3/8 (9.5)	1 3/4 (44)	3 3/4 (95)	2 3/8 (60)	1,560 (6.9)	261 (1.2)	390 (1.7)	555 (2.5)	2,880 (12.8)	588 (2.6)	720 (3.2)	30 (40.7)
	2 5/8 (67)	3 3/4 (95)	3 5/8 (92)	3,360 (14.9)	464 (2.1)	840 (3.7)	1,100 (4.9)	5,440 (24.2)	553 (2.5)	1,360 (6.0)	
	3 3/8 (86)	3 3/4 (95)	4 3/4 (121)	3,680 (16.4)	585 (2.6)	920 (4.1)	1,140 (5.1)	5,440 (24.2)	318 (1.4)	1,360 (6.0)	
1/2 (12.7)	2 1/4 (57)	5 (127)	3 1/8 (79)	3,280 (14.6)	871 (3.9)	820 (3.6)	1,070 (4.8)	5,280 (23.5)	849 (3.8)	1,320 (5.9)	60 (81.3)
	3 3/8 (86)	5 (127)	4 3/4 (121)	6,040 (26.9)	654 (2.9)	1,510 (6.7)	1,985 (8.8)	9,840 (43.8)	1,303 (5.8)	2,460 (10.9)	
	4 1/2 (114)	5 (127)	6 1/4 (159)	6,960 (31.0)	839 (3.7)	1,740 (7.7)	2,350 (10.5)	11,840 (52.7)	2,462 (11.0)	2,960 (13.2)	
5/8 (15.9)	2 3/4 (70)	6 1/4 (159)	3 7/8 (98)	4,520 (20.1)	120 (0.5)	1,130 (5.0)	1,640 (7.3)	8,600 (38.3)	729 (3.2)	2,150 (9.6)	90 (122.0)
	4 1/2 (114)	6 1/4 (159)	6 1/4 (159)	8,200 (36.5)	612 (2.7)	2,050 (9.1)	2,990 (13.3)	15,720 (69.9)	1,224 (5.4)	3,930 (17.5)	
	5 1/2 (140)	6 1/4 (159)	7 3/4 (197)	8,200 (36.5)	639 (2.8)	2,050 (9.1)	2,990 (13.3)	15,720 (69.9)	1,116 (5.0)	3,930 (17.5)	
3/4 (19.1)	3 3/8 (86)	7 1/2 (191)	4 3/4 (121)	6,760 (30.1)	1,452 (6.5)	1,690 (7.5)	2,090 (9.3)	9,960 (44.3)	1,324 (5.9)	2,490 (11.1)	150 (203.4)
	5 (127)	7 1/2 (191)	7 (178)	10,040 (44.7)	544 (2.4)	2,510 (11.2)	3,225 (14.3)	15,760 (70.1)	1,550 (6.9)	3,940 (17.5)	
	6 3/4 (171)	7 1/2 (191)	9 1/2 (241)	10,040 (44.7)	1,588 (7.1)	2,510 (11.2)	3,380 (15.0)	17,000 (75.6)	1,668 (7.4)	4,250 (18.9)	
7/8 (22.2)	3 7/8 (98)	8 3/4 (222)	5 3/8 (137)	7,480 (33.3)	821 (3.7)	1,870 (8.3)	2,275 (10.1)	10,720 (47.7)	1,253 (5.6)	2,680 (11.9)	200 (271.2)
	7 7/8 (200)	8 3/4 (222)	11 (279)	17,040 (75.8)	1,566 (7.0)	4,260 (18.9)	4,670 (20.8)	20,320 (90.4)	2,401 (10.7)	5,080 (22.6)	
1 (25.4)	4 1/2 (114)	10 (254)	6 1/4 (159)	15,400 (68.5)	2,440 (10.9)	3,850 (17.1)	3,885 (17.3)	15,680 (69.7)	1,876 (8.3)	3,920 (17.4)	300 (406.7)
	9 (229)	10 (254)	12 5/8 (321)	20,760 (92.3)	3,116 (13.9)	5,190 (23.1)	6,355 (28.3)	30,080 (133.8)	1,612 (7.2)	7,520 (33.5)	
1 1/4 (31.8)	5 5/8 (143)	12 1/2 (318)	7 7/8 (200)	15,160 (67.4)	1,346 (6.0)	3,790 (16.9)	4,990 (22.2)	24,760 (110.1)	625 (2.8)	6,190 (27.5)	400 (542.3)
	9 1/2 (241)	12 1/2 (318)	13 1/4 (337)	20,160 (89.7)	3,250 (14.5)	5,040 (22.4)	8,635 (38.4)	48,920 (217.6)	1,693 (7.5)	12,230 (54.4)	
1 1/2 (38.1)	9 1/2 (241)	12 1/2 (318)	13 1/4 (337)	•	•	5,040 (22.4)	8,635 (38.4)	•	•	12,230 (54.4)	400 (542.3)

1. The allowable loads listed are based on a safety factor of 4.0.
2. Allowable loads may be increased by 33⅓% for short term loading due to wind or seismic forces.
3. Refer to allowable load adjustment factors for edge distance on page 98.
4. 100% of the allowable load is permitted at Critical Spacing. No reduction in spacing is allowed.
5. Drill bit diameter used in base material corresponds to nominal anchor diameter.
6. Allowable loads may be linearly interpolated between concrete strengths listed.
7. Allowable loads for ¼-inch size at 1⅛-inch embedment apply to both the Wedge-All and Tie-Wire anchors. Installation torque does not apply to the Tie-Wire anchor.
8. The minimum concrete thickness is 1½ times the embedment depth.

Catalog C-SAS-2002 © Copyright 2002 SIMPSON STRONG-TIE COMPANY INC.

X:\Projects\100031696 (Pinal Co Queen Valley)\CADD\Sharon Drive\04_07_G04-G07_Standard Details.dwg Layout: G6 Jul 13, 2015 – 3:21pm

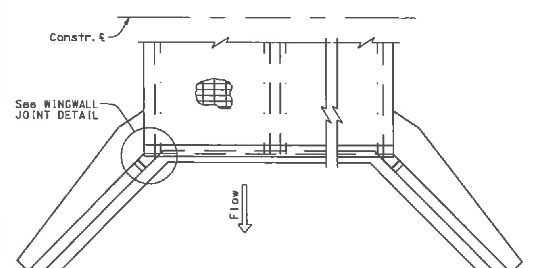

PART PLAN AT OUTLET END

NOTE:
For SECTION E-E see Dwg. (2 of 5)

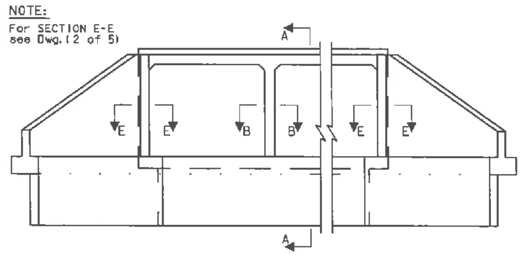

ELEVATION AT OUTLET END

NOTE A:
Use 3-#7 @3" spa. top and bott bars for culverts skewed 6° to 30°.
Use 3-#8 @3" spa. top and bott bars for culverts skewed 31° to 45°.
Culverts skewed over 45° require a special edge beam design.
Edge beam reinforcing quantity shall be added to table quantities.

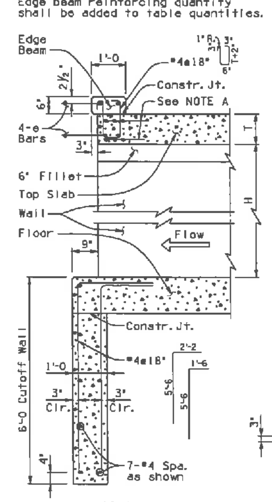

SECTION A-A

e Bars			
Skew ∠	Span		
	6' & 8'	10'	12'
0° to 20°	#6	#6	#6
25° & 30°	#6	#6	#7
35°	#6	#7	#8
40° & 45°	#6	#7	#9

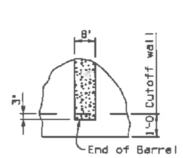

SECTION B-B

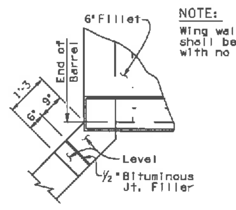

WINGWALL JOINT DETAIL
(For Barrel Height < 8 Ft.)

NOTE:
Wing wall footing shall be continuous with no joint.

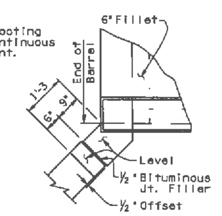

WINGWALL JOINT DETAIL
(For Barrel Height ≥ 8 Ft.)

NOTE:
Special design sections shall be adjoined with standard barrels when necessary.
Culvert barrels always begin and end with Table No. I.
Thickness of top and bottom slabs vary with depths of fill as shown.

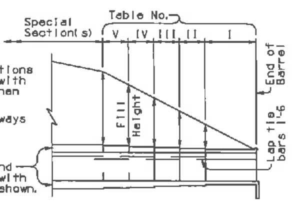

DIAGRAM SHOWING TABLE NO. TO BE USED FOR VARIOUS FILL HEIGHTS

GENERAL NOTES:

Construction Specification - Arizona Department of Transportation Standard Specifications for Road and Bridge Construction, latest Edition.

Design Specifications - AASHTO LRFD Bridge Design Specifications, 7th Edition 2014.

Loading Class - HL-93.

Design:
Soil weight = 120 p.c.f.

All Concrete shall be Class 'S' (f'c = 3000 psi).

Reinforcing steel shall conform to ASTM Specification A615. All reinforcing shall be furnished as Grade 60.

All bends and hooks shall meet the requirements of AASHTO LRFD Article 5.10. All bend dimensions for reinforcing steel shall be out-to-out of bars. All placement dimensions for reinforcing steel shall be to center of bars unless noted otherwise.

All reinforcing steel shall have 2" clear cover unless noted otherwise.

Chamfer all exposed corners ¾" unless noted otherwise.

Compact backfill for footing and wing base minimum 100 percent of ASTM D698 maximum dry density.

All structures shall have formed Construction joints in the top slab and walls (optional in floor slab) and spaced not more than 38'-6" apart or as shown in Project Plans. Joints shall be perpendicular to the centerline of the box. Reinforcing steel shall project 1'-6 thru the joint. The joint shall be made with a ¼" plywood bulkhead which shall be left in place or the alternate joint detail shown on Dwg. (2 of 5) may be used.

See Project Plans for culvert layout, invert elevations, finished grade elevations, headwall, apron, and other site specific details.

Dimensions shall not be scaled from drawings.

Pay item quantities of concrete and reinforcing steel include all labor and materials for box culvert, footing, headwalls, and aprons. Total Quantities include Barrel and Headwall Quantities shown in Tables (plus added quantity for apron when used). Barrel Quantities Table is per linear foot of box (multiply by length of box to obtain barrel total). Headwall Quantities Table includes wings, edge beam, and cutoff wall.

Culverts measuring 20 ft and greater to the inside faces of exterior walls, along the roadway centerline, shall be assigned a structure number. The structure number shall be referenced in the culvert summary sheet and drainage details.

NOTE:
For Dimensions, Quantities and additional Details, see SD 6.01 (2 to 5).

ARIZONA DEPARTMENT OF TRANSPORTATION INTERMODAL TRANSPORTATION DIVISION
BRIDGE GROUP STRUCTURE DETAIL
REINFORCED CONCRETE BOX CULVERTS MISCELLANEOUS DETAILS
SD 6.01 (1 of 5)

TABLE I
0'-10' FILL

Span 'S'	Height 'H'	Top Slab 'T'	Walls 'W'	aa Bar Size	aa Spacing	aa Length	bb Bar Size	bb Spacing	bb Length	cc Number ✦	ee Bar Size	ee Spacing	ee Length *	ff Bar Size	ff Spacing	ff Length *	gg Number ✦	D	hh Bar Size	hh Spacing	hh Length	F
6'	3'	9½"	8"	5	12"	4'-4	5	12"	8'-9	108	5	8"	34'-8	5	8"	34'-8	40	3'-0	4	8"	5'-1	2'-5
	4'	9½"	8"	5	12"	5'-4	5	12"	10'-9	120	5	8"	34'-8	5	8"	34'-8	40	3'-0	4	8"	5'-7	2'-5
	5'	9½"	8"	5	12"	6'-4	5	12"	12'-9	120	5	8"	34'-8	5	8"	34'-8	40	3'-0	4	8"	6'-1	2'-5
	6'	9½"	8"	5	12"	7'-4	5	12"	14'-9	132	5	8"	34'-8	5	8"	34'-8	40	3'-0	4	8"	6'-7	2'-5
	7'	9½"	8"	5	12"	8'-4	5	12"	16'-9	144	5	8"	34'-8	5	8"	34'-8	40	3'-0	4	8"	7'-1	2'-5
8'	3'	9½"	9"	5	12"	4'-4	5	12"	8'-8	108	5	7"	44'-10	6	8"	44'-10	60	4'-0	5	8"	5'-0	2'-6
	4'	9½"	9"	5	12"	5'-4	5	12"	10'-8	120	5	7"	44'-10	6	8"	44'-10	60	4'-0	5	8"	6'-0	2'-6
	5'	9½"	9"	5	12"	6'-4	5	12"	12'-8	120	5	7"	44'-10	6	8"	44'-10	60	4'-0	5	8"	6'-6	2'-6
	6'	9½"	9"	5	12"	7'-4	5	12"	14'-8	132	5	7"	44'-10	6	8"	44'-10	60	4'-0	5	8"	7'-0	2'-6
	7'	9½"	9"	5	12"	8'-4	5	12"	16'-8	144	5	7"	44'-10	6	8"	44'-10	60	4'-0	5	8"	7'-5	2'-6
	8'	9½"	9"	5	12"	9'-4	5	12"	18'-8	144	5	7"	44'-10	6	8"	44'-10	60	4'-0	5	8"	8'-0	2'-6
10'	3'	10½"	11"	5	12"	4'-6	5	12"	8'-11	108	5	6"	55'-2	6	6"	55'-2	100	5'-0	5	6"	5'-9	2'-8
	4'	10½"	11"	5	12"	5'-6	5	12"	10'-11	120	5	6"	55'-2	6	6"	55'-2	100	5'-0	5	6"	6'-3	2'-8
	5'	10½"	11"	5	12"	6'-6	5	12"	12'-11	120	5	6"	55'-2	6	6"	55'-2	100	5'-0	5	6"	6'-9	2'-8
	6'	10½"	11"	5	12"	7'-6	5	12"	14'-11	132	5	6"	55'-2	6	6"	55'-2	100	5'-0	5	6"	7'-3	2'-8
	7'	10½"	11"	5	12"	8'-6	5	12"	16'-11	144	5	6"	55'-2	6	6"	55'-2	100	5'-0	5	6"	7'-9	2'-8
	8'	10½"	11"	5	12"	9'-6	5	12"	18'-11	144	5	6"	55'-2	6	6"	55'-2	100	5'-0	5	6"	8'-3	2'-8
	9'	10½"	11"	5	12"	10'-6	5	12"	20'-11	156	5	6"	55'-2	6	6"	55'-2	100	5'-0	5	6"	8'-9	2'-8
	10'	10½"	11"	5	12"	11'-6	5	12"	22'-11	168	5	6"	55'-2	6	6"	55'-2	100	5'-0	5	6"	9'-3	2'-8
12'	8'	12½"	13"	5	12"	9'-10	5	12"	19'-7	144	6	7"	65'-6		7"	65'-6	130	6'-0	6	7"	8'-6	2'-10
	9'	12½"	13"	5	12"	10'-10	5	12"	21'-7	156	6	7"	65'-6		7"	65'-6	130	6'-0	6	7"	9'-0	2'-10
	10'	12½"	13"	5	12"	11'-10	5	12"	23'-7	168	6	7"	65'-6		7"	65'-6	130	6'-0	6	7"	9'-6	2'-10
	11'	12½"	13"	5	12"	12'-10	5	12"	25'-7	168	6	7"	65'-6	7	7"	65'-6	130	6'-0	6	7"	10'-0	2'-10
	12'	12½"	13"	5	12"	13'-10	5	12"	27'-7	180	6	7"	65'-6	7	7"	65'-6	130	6'-0	6	7"	10'-6	2'-10

✦ Total number of bars in the cross-section.
* Includes lap splice length.

TABLE II
10'-15' FILL

Span 'S'	Height 'H'	Top Slab 'T'	Walls 'W'	aa Bar Size	aa Spacing	aa Length	bb Bar Size	bb Spacing	bb Length	cc Number ✦	ee Bar Size	ee Spacing	ee Length *	ff Bar Size	ff Spacing	ff Length *	gg Number ✦	D	hh Bar Size	hh Spacing	hh Length	F
6'	3'	8"	8"	5	12"	4'-1	5	12"	8'-3	108	5	8"	34'-8	5	7"	34'-8	40	3'-0	4	7"	5'-0	2'-5
	4'	8"	8"	5	12"	5'-1	5	12"	10'-3	120	5	8"	34'-8	5	7"	34'-8	40	3'-0	4	7"	5'-6	2'-5
	5'	8"	8"	5	12"	6'-1	5	12"	12'-3	120	5	8"	34'-8	5	7"	34'-8	40	3'-0	4	7"	6'-0	2'-5
	6'	8"	8"	5	12"	7'-1	5	12"	14'-3	132	5	8"	34'-8	5	7"	34'-8	40	3'-0	4	7"	6'-6	2'-5
	7'	8"	8"	5	12"	8'-1	5	12"	16'-3	144	5	8"	34'-8	5	7"	34'-8	40	3'-0	4	7"	7'-0	2'-5
8'	3'	10½"	9"	5	12"	4'-6	5	12"	9'-1	108	5	7"	44'-10	6	7"	44'-10	50	4'-0	4	7"	5'-3	2'-6
	4'	10½"	9"	5	12"	5'-6	5	12"	11'-1	120	5	7"	44'-10	6	7"	44'-10	50	4'-0	4	7"	5'-6	2'-6
	5'	10½"	9"	5	12"	6'-6	5	12"	13'-1	120	5	7"	44'-10	6	7"	44'-10	50	4'-0	4	7"	6'-3	2'-6
	6'	10½"	9"	5	12"	7'-6	5	12"	15'-1	132	5	7"	44'-10	6	7"	44'-10	50	4'-0	4	7"	6'-9	2'-6
	7'	10½"	9"	5	12"	8'-6	5	12"	17'-1	144	5	7"	44'-10	6	7"	44'-10	50	4'-0	4	7"	7'-3	2'-6
	8'	10½"	9"	5	12"	9'-6	5	12"	19'-1	144	5	7"	44'-10	6	7"	44'-10	50	4'-0	5	7"	7'-9	2'-6
10'	3'	12½"	11"	5	12"	4'-10	5	12"	9'-7	108	5	6"	55'-2	7	7"	55'-2	60	5'-0	5	7"	5'-10	2'-8
	4'	12½"	11"	5	12"	5'-10	5	12"	11'-7	120	5	6"	55'-2	7	7"	55'-2	60	5'-0	5	7"	6'-4	2'-8
	5'	12½"	11"	5	12"	6'-10	5	12"	13'-7	120	5	6"	55'-2	7	7"	55'-2	60	5'-0	5	7"	6'-10	2'-8
	6'	12½"	11"	5	12"	7'-10	5	12"	15'-7	132	5	6"	55'-2	7	7"	55'-2	60	5'-0	5	7"	7'-4	2'-8
	7'	12½"	11"	5	12"	8'-10	5	12"	17'-7	144	5	6"	55'-2	7	7"	55'-2	60	5'-0	5	7"	7'-10	2'-8
	8'	12½"	11"	5	12"	9'-10	5	12"	19'-7	144	5	6"	55'-2	7	7"	55'-2	60	5'-0	5	7"	8'-4	2'-8
	9'	12½"	11"	5	12"	10'-10	5	12"	21'-7	156	5	6"	55'-2	7	7"	55'-2	60	5'-0	5	7"	8'-10	2'-8
	10'	12½"	11"	5	12"	11'-10	5	12"	23'-7	168	6	6"	55'-2	7	7"	55'-2	60	5'-0	5	7"	9'-4	2'-8
12'	8'	15"	13"	5	12"	10'-3	5	12"	20'-4	144	6	7"	65'-6		7"	65'-6	70	6'-0	5	7"	8'-9	2'-11
	9'	15"	13"	5	12"	11'-3	5	12"	22'-4	156	6	7"	65'-6		7"	65'-6	70	6'-0	5	7"	9'-3	2'-11
	10'	15"	13"	5	12"	12'-3	5	12"	24'-4	168	6	7"	65'-6		7"	65'-6	70	6'-0	6	7"	9'-9	2'-11
	11'	15"	13"	5	10"	13'-3	5	12"	26'-4	168	6	7"	65'-6	7	7"	65'-6	70	6'-0	6	7"	10'-9	3'-5
	12'	15"	13"	5	10"	14'-3	5	12"	28'-4	180	6	7"	65'-6	7	7"	65'-6	70	6'-0	6	7"	11'-3	3'-5

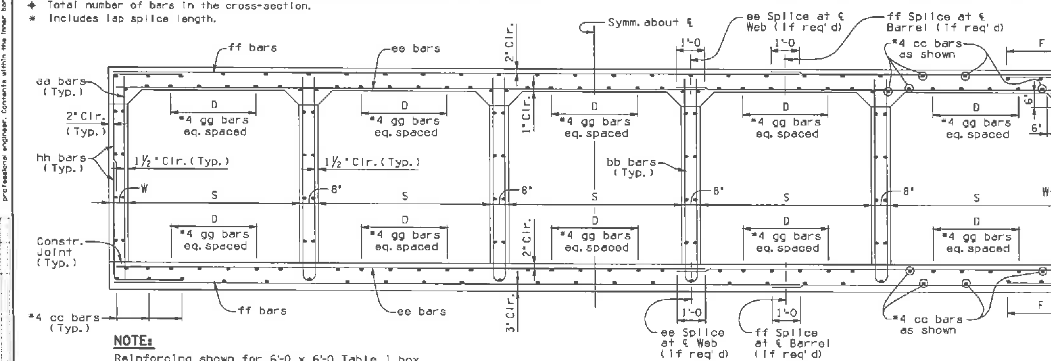

NOTE:
Reinforcing shown for 6'-0 x 6'-0 Table I box. Use the appropriate table to determine the reinforcing requirements of selected box.

TYPICAL SECTION
(Shown as 6'-0 x 6'-0 Table I)

Height 'H'	'J' Dim.	'K' Spaces
3'	9"	1
4'	6"	2
5'	12"	2
6'	9"	3
7'	6"	4
8'	12"	4
9'	9"	5
10'	6"	6
11'	12"	6
12'	9"	7

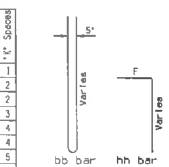

BENDS

NOTE:
For General Notes, Dimensions, and additional Details, see SD 6.01 (1 to 4). For Quantities and Tables III thru V see SD 6.05 (2 of 2).

ARIZONA DEPARTMENT OF TRANSPORTATION INTERMODAL TRANSPORTATION DIVISION
BRIDGE GROUP STRUCTURE DETAIL
REINFORCED CONCRETE BOX CULVERTS FIVE BARREL (10'-15' FILLS)
SD 6.05 (1 of 2)

New box culverts shall not be constructed using 3' or 4' heights without special approval from ADOT Bridge Group. Tables referencing these sizes are provided for extension of existing box culverts only.

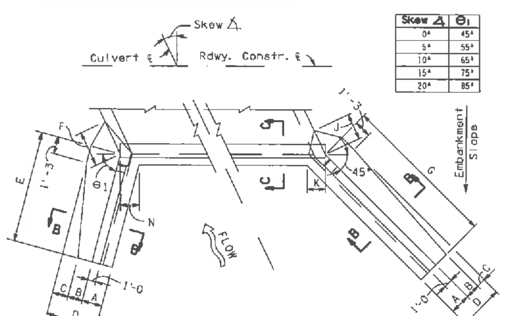

PLAN

Skew ∠	θ1
0°	45°
5°	55°
10°	65°
15°	75°
20°	85°

NOTE:
For SECTION C-C, see SD 6.01 (2 of 5).

2 : 1 Slope — Dimensions

Skew ∠	0°					5°					10°					15°					20°				
Height H	8'	9'	10'	11'	12'	8'	9'	10'	11'	12'	8'	9'	10'	11'	12'	8'	9'	10'	11'	12'	8'	9'	10'	11'	12'
A	2'-0	2'-1	2'-2	2'-3	2'-4	2'-0	2'-1	2'-2	2'-3	2'-4	2'-0	2'-1	2'-2	2'-3	2'-4	2'-0	2'-1	2'-2	2'-3	2'-4	2'-0	2'-1	2'-2	2'-3	2'-4
B	1'-4	1'-5	1'-6	1'-9	1'-11	1'-4	1'-5	1'-6	1'-7	1'-9	1'-4	1'-5	1'-6	1'-7	1'-8	1'-4	1'-5	1'-6	1'-7	1'-8	1'-4	1'-5	1'-6	1'-7	1'-8
C	2'-2	2'-7	3'-0	3'-6	4'-2	2'-2	2'-7	3'-0	3'-8	4'-4	2'-2	2'-7	3'-0	3'-8	4'-5	2'-2	2'-7	3'-0	3'-8	4'-5	2'-2	2'-7	3'-0	3'-8	4'-5
D	5'-6	6'-1	6'-8	7'-6	8'-5	5'-6	6'-1	6'-8	7'-6	8'-5	5'-6	6'-1	6'-8	7'-6	8'-5	5'-6	6'-1	6'-8	7'-6	8'-5	5'-6	6'-1	6'-8	7'-6	8'-5
E	13'-0	14'-6	16'-0	17'-0	18'-6	12'-6	14'-0	15'-6	16'-6	18'-0	12'-6	13'-6	15'-0	16'-6	18'-0	12'-6	14'-0	15'-0	16'-6	18'-0	13'-0	14'-6	15'-6	17'-0	18'-6
F	4'-8	5'-4	6'-1	7'-1	8'-3	4'-7	5'-4	6'-0	7'-1	8'-3	4'-7	5'-3	5'-11	7'-0	8'-2	4'-6	5'-2	5'-10	6'-10	8'-0	4'-4	5'-0	5'-8	6'-8	7'-9
G	13'-0	14'-6	16'-0	17'-0	18'-6	13'-6	15'-0	16'-6	18'-0	19'-6	14'-6	16'-0	17'-6	19'-0	20'-6	15'-0	17'-0	18'-6	20'-0	22'-0	16'-0	18'-0	19'-6	21'-6	23'-6
J	4'-8	5'-4	6'-1	7'-1	8'-3	4'-7	5'-4	6'-0	7'-1	8'-3	4'-7	5'-3	5'-11	7'-0	8'-2	4'-6	5'-2	5'-10	6'-10	8'-0	4'-4	5'-0	5'-8	6'-8	7'-9
K	2'-0⅞	2'-2⅜	2'-3¾	2'-5⅛	2'-6⅝	2'-0⅞	2'-2⅜	2'-3¾	2'-5⅛	2'-6⅝	2'-0⅞	2'-2⅜	2'-3¾	2'-5⅛	2'-6⅝	2'-0⅞	2'-2⅜	2'-3¾	2'-5⅛	2'-6⅝	2'-0⅞	2'-2⅜	2'-3¾	2'-5⅛	2'-6⅝
L	4'-6	4'-11	5'-5	6'-1	6'-6	3'-11	4'-4	4'-9	5'-4	5'-8	3'-5	3'-11	4'-3	4'-7	4'-11	3'-0	3'-4	3'-10	4'-1	4'-4	2'-7	2'-10	3'-4	3'-7	3'-10
M	4'-6	4'-11	5'-5	6'-1	6'-6	4'-3	4'-9	5'-3	5'-8	6'-2	3'-11	4'-5	4'-11	5'-4	5'-10	3'-9	4'-1	4'-6	5'-0	5'-3	3'-5	3'-8	4'-2	4'-6	4'-9
N	2'-0⅞	2'-2⅜	2'-3¾	2'-5⅛	2'-6⅝	1'-11	2'-0¼	2'-1½	2'-2⅝	2'-3⅞	1'-10¼	1'-11⅜	2'-0½	2'-1⅝	2'-2⅞	1'-10½	1'-11½	2'-0½	2'-1½	2'-2⅝	1'-11¼	2'-0¼	2'-1¼	2'-2⅜	2'-3⅜

4 : 1 Slope — Dimensions

Skew ∠	0°					5°					10°					15°					20°				
Height H	8'	9'	10'	11'	12'	8'	9'	10'	11'	12'	8'	9'	10'	11'	12'	8'	9'	10'	11'	12'	8'	9'	10'	11'	12'
A	2'-0	2'-1	2'-2	2'-3	2'-4	2'-0	2'-1	2'-2	2'-3	2'-4	2'-0	2'-1	2'-2	2'-3	2'-4	2'-0	2'-1	2'-2	2'-3	2'-4	2'-0	2'-1	2'-2	2'-3	2'-4
B	1'-8	1'-11	2'-2	2'-5	2'-8	1'-6	1'-9	2'-0	2'-3	2'-6	1'-5	1'-8	1'-11	2'-2	2'-4	1'-4	1'-6	1'-9	1'-11	2'-2	1'-4	1'-5	1'-6	1'-8	1'-10
C	1'-6	1'-8	1'-10	2'-3	2'-9	1'-8	1'-10	2'-0	2'-5	2'-11	1'-9	1'-11	2'-1	2'-6	3'-1	1'-10	2'-1	2'-3	2'-9	3'-3	1'-10	2'-2	2'-6	3'-0	3'-7
D	5'-2	5'-8	6'-2	6'-11	7'-9	5'-2	5'-8	6'-2	6'-11	7'-9	5'-2	5'-8	6'-2	6'-11	7'-9	5'-2	5'-8	6'-2	6'-11	7'-9	5'-2	5'-8	6'-2	6'-11	7'-9
E	17'-0	19'-0	21'-0	23'-0	25'-0	17'-6	19'-6	21'-0	23'-0	25'-0	18'-0	19'-6	21'-6	23'-6	25'-6	18'-6	20'-6	22'-6	24'-6	26'-6	20'-0	22'-0	24'-0	26'-6	28'-6
F	4'-2	4'-9	5'-4	6'-3	7'-4	4'-2	4'-9	5'-4	6'-3	7'-4	4'-1	4'-8	5'-3	6'-2	7'-3	4'-0	4'-7	5'-2	6'-1	7'-1	3'-11	4'-5	5'-0	5'-11	6'-11
G	17'-0	19'-0	21'-0	23'-0	25'-0	18'-6	20'-6	22'-6	24'-6	26'-6	19'-6	22'-0	24'-0	26'-0	28'-6	21'-6	23'-6	26'-0	28'-6	30'-6	23'-6	26'-0	28'-6	31'-0	34'-0
J	4'-2	4'-9	5'-4	6'-3	7'-4	4'-2	4'-9	5'-4	6'-3	7'-4	4'-1	4'-8	5'-3	6'-2	7'-3	4'-0	4'-7	5'-2	6'-1	7'-1	3'-11	4'-5	5'-0	5'-11	6'-11
K	2'-0⅞	2'-2⅜	2'-3¾	2'-5⅛	2'-6⅝	2'-0⅞	2'-2⅜	2'-3¾	2'-5⅛	2'-6⅝	2'-0⅞	2'-2⅜	2'-3¾	2'-5⅛	2'-6⅝	2'-0⅞	2'-2⅜	2'-3¾	2'-5⅛	2'-6⅝	2'-0⅞	2'-2⅜	2'-3¾	2'-5⅛	2'-6⅝
L	6'-1	6'-8	7'-4	8'-0	8'-8	5'-6	6'-1	6'-9	7'-4	7'-11	5'-0	5'-8	6'-2	6'-9	7'-3	4'-7	5'-1	5'-8	6'-2	6'-8	4'-1	4'-7	5'-1	5'-6	6'-0
M	6'-1	6'-8	7'-4	8'-0	8'-8	5'-10	6'-5	7'-1	7'-9	8'-5	5'-7	6'-2	6'-10	7'-6	8'-0	5'-3	5'-11	6'-6	7'-0	7'-8	4'-11	5'-6	6'-0	6'-7	7'-1
N	2'-0⅞	2'-2⅜	2'-3¾	2'-5⅛	2'-6⅝	1'-11	2'-0¼	2'-1½	2'-2⅝	2'-3⅞	1'-10¼	1'-11⅜	2'-0½	2'-1⅝	2'-2⅞	1'-10½	1'-11½	2'-0½	2'-1½	2'-2⅝	1'-11¼	2'-0¼	2'-1¼	2'-2⅜	2'-3⅜

6 : 1 Slope — Dimensions

Skew ∠	0°	5°	10°	15°	20°
Height H	8'	8'	8'	8'	8'
A	2'-0	2'-0	2'-0	2'-0	2'-0
B	1'-11	1'-10	1'-9	1'-8	1'-6
C	1'-2	1'-3	1'-4	1'-5	1'-7
D	5'-1	5'-1	5'-1	5'-1	5'-1
E	19'-6	20'-0	21'-0	22'-0	24'-0
F	4'-1	4'-0	4'-0	3'-11	3'-9
G	19'-6	21'-0	22'-6	24'-6	27'-6
J	4'-1	4'-0	4'-0	3'-11	3'-9
K	2'-0⅞	2'-0⅞	2'-0⅞	2'-0⅞	2'-0⅞
L	6'-9	6'-4	5'-11	5'-6	5'-1
M	6'-9	6'-7	6'-5	6'-2	5'-10
N	2'-0⅞	1'-11	1'-10½	1'-10½	1'-11¼

Height H	'a' bars	'b' bars
8'	#5	#5
9'	#6	#5
10'	#6	#5
11'	#6	#5
12'	#6	#6

	Height H	'c' Bars Short Wing Skew ∠ 0°	5°	10°	15°	20°	'c' Bars Long Wing Wall	Dim 'X'	* 'd' Bars Short Wing 0° to 10°	15° & 20°	* 'd' Bars Long Wing 0° to 20°
2 : 1 Slope	8'	3-#5	3-#5	2-#5	2-#5	-	3-#5	2'-0	-	-	-
	9'	5-#5	4-#5	3-#5	3-#5	2-#5	5-#5	3'-0	-	-	-
	10'	8-#6	7-#6	6-#6	5-#6	4-#6	8-#6	4'-3	3-#5	-	3-#5
	11'	11-#7	10-#7	9-#7	7-#7	6-#7	11-#7	6'-9	6-#5	5-#5	6-#5
	12'	11-#7	10-#7	9-#7	7-#7	6-#7	11-#7	6'-9	9-#7	7-#6	9-#7
4 : 1 Slope	9'	7-#5	6-#5	6-#5	5-#5	4-#5	7-#6	3'-0	-	-	-
	10'	12-#5	11-#5	10-#5	9-#5	8-#5	12-#5	4'-0	-	-	-
	11'	18-#7	17-#7	16-#7	15-#7	14-#7	18-#7	6'-3	11-#5	6-#5	11-#5
	12'	18-#7	17-#7	16-#7	15-#7	14-#7	18-#7	6'-3	11-#6	11-#6	11-#6

* 'd' bars alternate with 'c' bars at high end of wall.

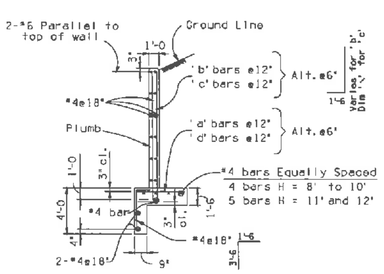

SECTION B-B

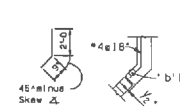

SECTION D-D

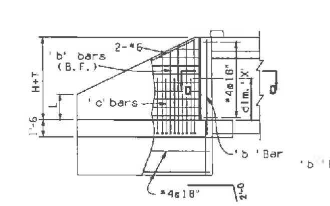

SHORT WING ELEVATION

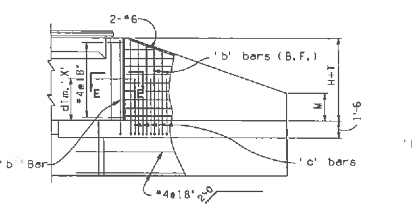

LONG WING ELEVATION

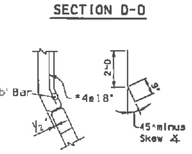

SECTION E-E

NOTE:
For General Notes, Dimensions, and additional Details, see SD 6.01 (2 of 5). For Headwall Quantities see SD 6.09 (1 to 3).

ARIZONA DEPARTMENT OF TRANSPORTATION INTERMODAL TRANSPORTATION DIVISION
BRIDGE GROUP STRUCTURE DETAIL
REINFORCED CONCRETE BOX CULVERTS INLET WINGS - SKEW 0° to 20°

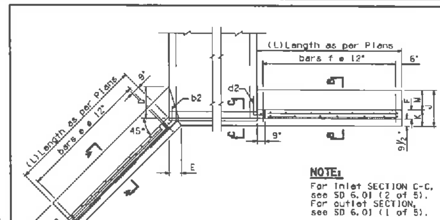

TYPE A WING TYPE B WING

HEADWALL PLAN
(Shown At Inlet)

NOTE:
For Inlet SECTION C-C, see SD 6.01 (2 of 5).
For outlet SECTION, see SD 6.01 (1 of 5).

DIMENSIONS										
Height of Opening	A	B	C	D	E	F	G	J	K	M
8'	1'-9	3'-9	5'-6	5'-4	1'-9⅝	11½	0'-9	5'-6	1'-9	3'-9
9'	2'-0	4'-0	6'-0	5'-8	2'-1	11½	1'-0	6'-0	1'-9	4'-3
10'	2'-0	4'-6	6'-6	6'-4	2'-1	11½	1'-0	6'-6	1'-9	4'-9
11'	2'-4	4'-8	7'-0	6'-7	2'-6⅝	1'-0⅝	1'-3	7'-0	1'-10	5'-2
12'	2'-6	4'-9	7'-3	6'-9	2'-9⅝	1'-1⅝	1'-4	8'-0	1'-11	6'-1

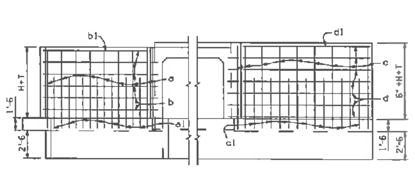

TYPE A WING TYPE B WING

ELEVATION (Back Face Reinf.)
(Shown At Inlet)

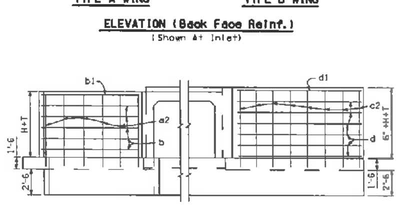

TYPE A WING TYPE B WING

ELEVATION (Front Face Reinf.)
(Shown At Inlet)

For details not shown, see SECTION A-A or SECTION B-B.

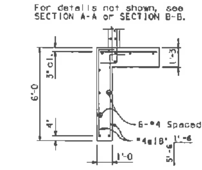

OUTLET CUT-OFF WALL DETAIL

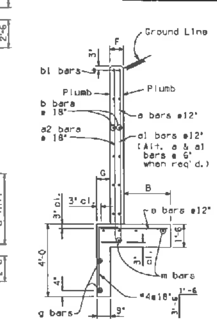

SECTION A-A

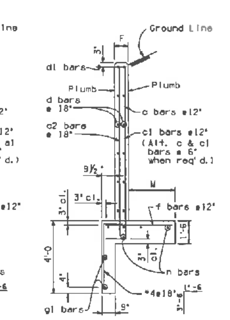

SECTION B-B

WINGS STEEL LIST (L=H+2)

Mark	Bend	8' Height No.	Size	Length	9' Height No.	Size	Length	10' Height No.	Size	Length	11' Height No.	Size	Length	12' Height No.	Size	Length
TYPE A WING																
a	J	20	#7	11'-0	22	#8	12'-3	24	#6	13'-3	26	#7	14'-3	28	#7	15'-3
a1	J							24	#6	6'-6	26	#7	6'-9	28	#7	7'-0
a2	str.	14	#4	9'-3	14	#4	11'-0	16	#4	12'-0	18	#4	13'-0	18	#4	14'-0
b	str.	20	#4	9'-0	24	#4	10'-0	28	#4	11'-0	28	#4	12'-0	32	#4	13'-0
b1	str.	4	#6	9'-0	4	#6	10'-0	4	#6	11'-0	4	#6	12'-0	4	#6	13'-0
b2	L	12	#4	2'-3	14	#4	2'-3	16	#4	2'-3	16	#4	2'-3	18	#4	2'-3
e	str.	20	#5	5'-0	22	#6	5'-6	24	#7	6'-0	26	#7	6'-6	28	#8	6'-9
g	B	4	#4	12'-3	4	#4	13'-9	4	#4	14'-9	4	#4	16'-0	4	#4	17'-0
h	str.	10	#4	9'-6	10	#4	10'-6	10	#4	11'-6	10	#4	12'-6	10	#4	13'-6
TYPE B WING																
c	A	20	#7	11'-6	22	#8	12'-6	24	#6	13'-9	26	#7	14'-9	28	#7	15'-9
c1	A							24	#6	6'-6	26	#7	6'-9	28	#7	7'-0
c2	str.	14	#4	10'-3	14	#4	11'-6	16	#4	12'-6	18	#4	13'-6	18	#4	14'-6
d	str.	24	#4	9'-0	28	#4	10'-6	28	#4	11'-0	32	#4	12'-0	36	#4	13'-0
d1	str.	4	#6	9'-0	4	#6	10'-0	4	#6	11'-0	4	#6	12'-0	4	#6	13'-0
d2	D	14	#4	2'-3	16	#4	2'-3	16	#4	2'-3	18	#4	2'-3	20	#4	2'-3
f	str.	20	#5	5'-0	22	#6	5'-6	24	#7	6'-0	26	#7	6'-6	28	#8	7'-6
g1	str.	4	#4	11'-3	4	#4	12'-3	4	#4	13'-3	4	#4	14'-3	4	#4	15'-3
n	str.	10	#4	9'-6	10	#4	10'-6	10	#4	11'-6	10	#4	12'-6	10	#4	13'-6

APPROXIMATE HEADWALL QUANTITIES*

Span	Height	Hdwl. Type A Wings For L=H+2' Conc.	Steel	Per each Add'l ft Conc.	Steel	Hdwl. Type B Wings For L=H+2' Conc.	Steel	Per each Add'l ft Conc.	Steel
8'	8'	15.07	1017	0.682	46	16.05	1095	0.703	49
10'	8'	15.44	1045	0.690	46	15.41	1128	0.707	49
	9'	18.30	1462	0.753	61	18.18	1556	0.771	63
	10'	21.49	1655	0.817	64	21.20	1708	0.835	65
12'	8'	15.78	1071	0.696	46	15.80	1155	0.714	49
	9'	18.67	1488	0.759	61	18.59	1582	0.777	63
	10'	21.86	1680	0.822	64	21.61	1734	0.840	65
	11'	25.95	2197	0.883	78	25.61	2295	0.922	81
	12'	30.03	2596	1.015	87	30.06	2908	1.035	96

* Includes curb and cut-off wall quantities for a single barrel.

CURB & CUT-OFF QUANTITIES PER EACH ADDITIONAL BARREL

8' Spans Conc.	Steel	10' Spans Conc.	Steel	12' Spans Conc.	Steel
1.114	103	1.370	130	1.625	155

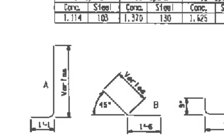

BENDS

NOTE:
For General Notes, Dimensions, and additional Details, see SD 6.01 (1 & 2 of 5).

ARIZONA DEPARTMENT OF TRANSPORTATION INTERMODAL TRANSPORTATION DIVISION
BRIDGE GROUP STRUCTURE DETAIL

Note:
For Detail SD_6.08_(7 of 8) use wallwing At 90° to Headwall, each side as shown on Headwall Detail on Sheet 3.

	NAME	DATE
DESIGN	LAP	07/2015
DRAWN	GP	07/2015
CHECKED	LAP	07/2015

ATKINS

STANDARD DETAILS

6

LOCATION: Queen Valley Queen Creek Flood Mitigation – Sharon Drive

DRAWING NO: G6

CONSTRUCTION NOTES:

NO.	DESCRIPTION
11	INSTALL GATE VALVE W/ BOX & COVER, PER MAG STD DTL 391 AND THRUST BLOCK PER MAG STD DETAIL 301. DIAMETER TO MATCH PIPE SIZE.
14	PROTECT EXISTING 8" VCP SANITARY SEWER IN PLACE.
18	INSTALL COMBINATION 1 ½"AIR RELEASE AND VACUUM VALVE PER DETAIL ON SHEET 5.
22	INSTALL WATER LINE ENCASEMENT, PER DETAIL SHEET 8.
23	INSTALL 6" DUCTILE IRON WATERLINE PIPE WITH MECHANICAL JOINTS AND REMOVE E/ISTING UNUSED PIPE.
24	INSTALL 6" DUCTILE IRON BEND WITH MECHANICAL JOINTS.
25	CONNECT TO E/ISTING WATER MAIN.

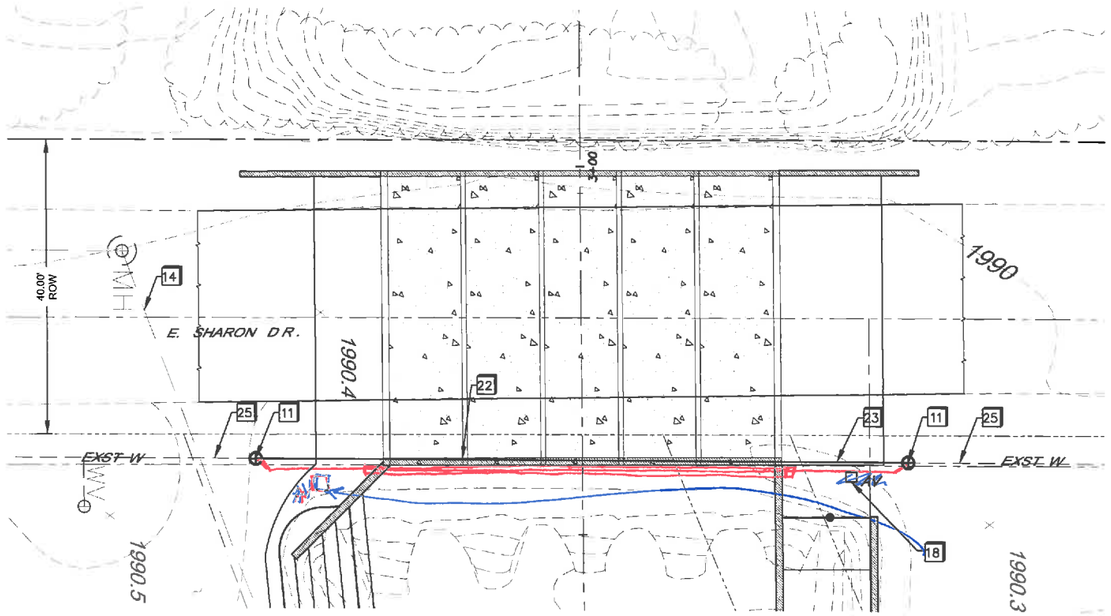

PLAN
E. SHARON DR.

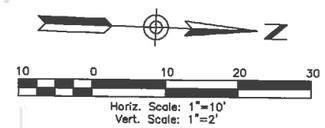

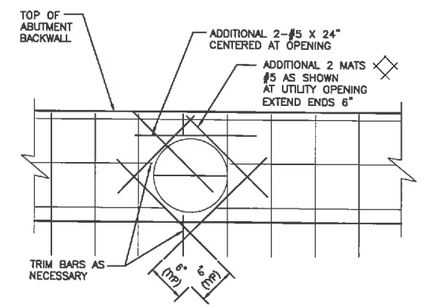

DETAIL AT UTILITY OPENINGS
SCALE: 1" = 1'-0"

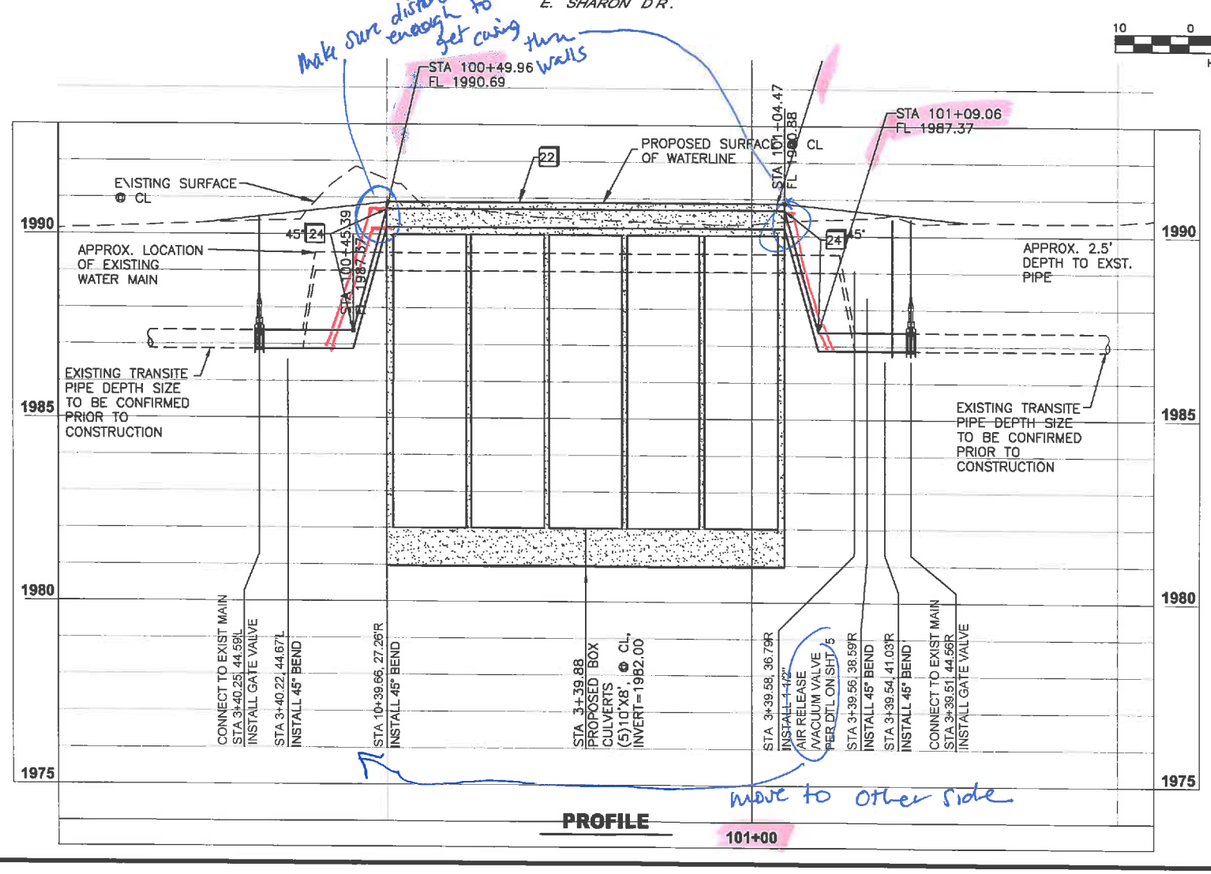

PROFILE

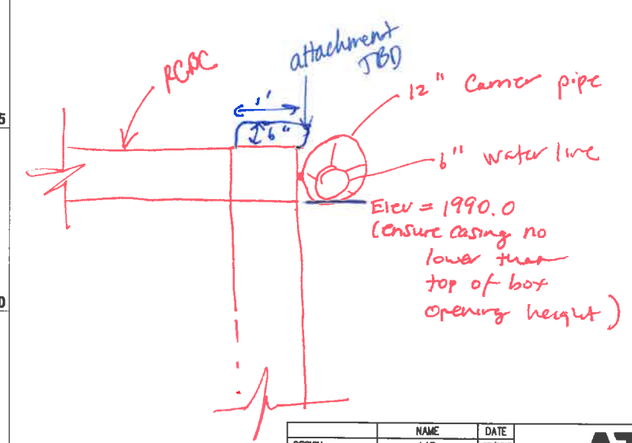

NOTE:
ALL EXISTING UTILITIES ARE APPROXIMATE. CONTRACTOR TO FIELD VERIFY ALL UTILITIES PRIOR TO CONSTRUCTION.

Call at least two full working days before you begin excavation.
ARIZONA 811
Dial 8-1-1 or 1-800-STAKE-IT (782-5348)
In Maricopa County: (602) 263-1100

	NAME	DATE
DESIGN	LAP	07/2015
DRAWN	GP	07/2015
CHECKED	LAP	07/2015

ATKINS

WATER IMPROVEMENTS
PLAN & PROFILE

LOCATION
Queen Valley Queen Creek Flood Mitigation – Sharon Drive

18

DRAWING NO: QVW_01

X:\Projects\100031696 (Pinal Co Queen Valley)\CADD\Sharon Drive\18_QVW01_Plan & Profiles_Water.dwg Layout: QVW 01 Jul 15, 2015 - 12:35pm