Call at least two full working days before you begin excavation.
ARIZONA 811
Arizona Blue Stake, Inc.
Dial 8-1-1 or 1-800-STAKE-IT (782-5348)
In Maricopa County: (602) 263-1100

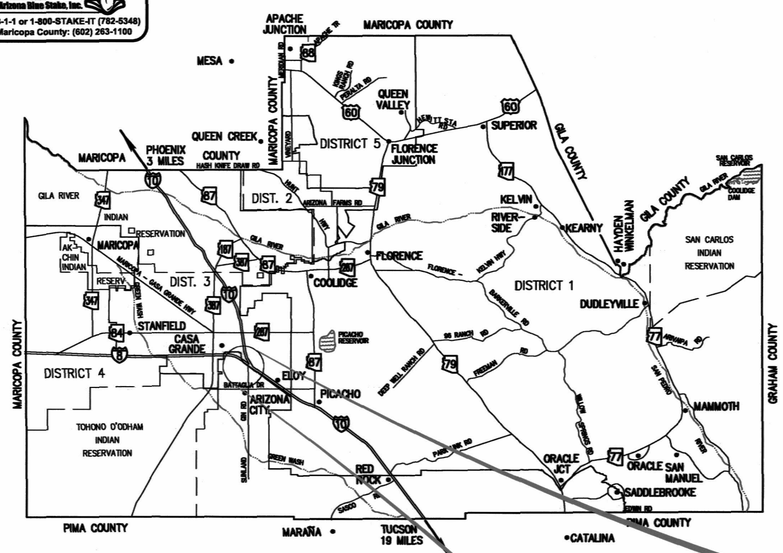

PINAL COUNTY

PINAL COUNTY

DEPARTMENT OF PUBLIC WORKS

ENGINEERING BRANCH

PROPOSED MOUNTAIN VIEW ESTATES ACCESS ROAD (UNAMED)

FROM JOHN JACOB ASTOR AVE TO SUNLAND GIN RD
T07S, R06E, Section 24

NEW ROADWAY CONSTRUCTION

PROJECT NO. 60640562

F.H.W.A. REGION	STATE	PROJECT NUMBER	SHEET NO.	TOTAL SHEETS	AS BUILT
9	AZ	60640562	1	19	

JFK/AT/BLF	BLF	JFK/AT
DESIGNED	DRAWN	CHECKED
DATE: 6/16	DATE: 6/16	DATE: 6/16

PINAL • COUNTY
wide open opportunity

PINAL COUNTY BOARD OF SUPERVISORS

DISTRICT ONE – PETE RIOS
DISTRICT TWO – CHERYL CHASE
DISTRICT THREE – STEPHEN MILLER
DISTRICT FOUR – ANTHONY SMITH
DISTRICT FIVE – TODD HOUSE

MANAGEMENT

COUNTY MANAGER – GREG STANLEY
COUNTY ENGINEER – SCOTT BENDER, P.E., C.F.M.

INDEX TO SHEETS

DRAWING NO	DESCRIPTION	SHEET NO
G1	Cover Sheet	1
G2	General Notes & Legend	2
DS1	Typical Section's & Pavement Structural Section	3
S1	Barrier Summary Sheet	4
D1–D4	Detail Sheet's	5–8
SV1	Survey Control Sheet	9
P1–P3	Plan & Profile Sheet's	10–12
CV1	Culvert Detail Sheet	13
T1–T3	Pavement Marking & Signing Plan	14–16
SW1–SW3	Sediment & Erosion Control Plan	17–19

PROJECT MANAGER

ANGELINE TO
PINAL COUNTY DEPARTMENT OF PUBLIC WORKS
31 NORTH PINAL STREET
FLORENCE, AZ 85232
TEL: (520) 866–6411
FAX: (520) 866–6511

AS-BUILT CERTIFICATION

I HEREBY CERTIFY THAT THE "RECORD DRAWING" MEASUREMENTS AS SHOWN HEREON WERE MADE UNDER MY SUPERVISION OR AS NOTED AND ARE CORRECT TO THE BEST OF MY KNOWLEDGE AND BELIEF.

REGISTERED ENGINEER / LAND SURVEYOR DATE

REGISTRATION NUMBER

APPROVED COUNTY ENGINEER 6/10/2016 DATE

PROPOSED MOUNTAIN VIEW ESTATES ACCESS ROAD (UNAMED), FROM JOHN JACOB ASTOR AVE TO SUNLAND GIN RD (60640562)

F.H.W.A. REGION	STATE	PROJECT NO.	SHEET NO.	TOTAL SHEETS	AS BUILT
9	AZ	60640562	2	19	

Symbols & Linetype Legend

- Existing Edge Of Concrete
- Existing Edge Of Dirt Road / Driveway
- Existing Edge Of Paved Road / Driveway
- Exising Flowline
- Existing Block Fence / Building
- Existing Wood Fence
- Existing Chainlink Fence
- Existing Barbed Wire Fence
- Existing Underground Cable TV Line
- Existing Overhead Electric / Joint Use Line
- Existing Underground Electric Line
- Existing Underground Fiber Optic Line
- Existing Underground Natural Gas Line
- Existing Sanitary Sewer Line
- Existing Overhead Telephone Line
- Existing Underground Telephone Line
- Existing Water Line
- Existing Right-Of-Way
- Proposed Right-Of-Way
- Survey Centerline
- Section Line
- Parcel / Property Line

- Existing Barrel Cactus
- Existing Century Plant
- Existing Cholla Cactus
- Existing Ocotillo
- Existing Organ Pipe Cactus
- Existing Saguaro Cactus
- Existing Yucca Plant
- Existing Mesquite Tree
- Existing Paloverde Tree
- Existing Palm Tree
- Existing Misc Coniferous Tree
- Existing Misc Deciduous Tree
- Existing Misc Shrub
- Existing Mail Box
- Existing Sign / Delineator
- Existing Utility Pole
- Existing Guy Wire
- Existing Electrical Junction Box
- Existing Cable TV Box
- Existing Telephone Riser
- Existing Gas Meter
- Existing Gas Valve
- Existing Water Meter
- Existing Water Valve
- Existing Fire Hydrant
- Existing Sanitary Sewer Manhole

GENERAL NOTES

1. All work shall conform to the MAG Uniform Standard Specifications for Public Works Construction latest revision.
2. The information on these drawings showing the type, size and location of existing utilities is based on the best information available. It is the contractor's responsibility to determine their exact location and protect all utilities that are to remain, unless otherwise noted or specified.
3. The contractor shall be responsible for contacting Blue Stake (telephone 1-800-782-5348) to insure all utilities are properly marked prior to digging.
4. The coordinates, bearings and bench marks used for the project are based upon the control survey for Mountain View Estates access road improvement project produced by Pinal County Survey Dept.
5. All taper, radii and turnout dimensions are to edge of new pavement, unless otherwise noted. All station and call out distances left and right refer to the construction ℄.
6. Exact point of matching, termination and overlay of new pavement may be adjusted in the field by the engineer if necessary.
7. The contractor shall remove all structures and obstructions within the project right-of-way and temporary construction easements, unless otherwise noted on the plans.
8. The contractor shall maintain utility services and drainage without interruption though out this contract.
9. All mailboxes interfering with construction shall be relocated by the contractor as to provide uninterrupted mail services.
10. Elevations shown on plan are to finished grade, unless otherwise noted or specified.
11. The contractor shall verify all bench mark elevations before using them for construction.
12. Design Data:
    Design Speed = 35mph
    ADT = Less Than 400

	NAME	DATE
DESIGN	JFK/AT/BLF	6/18
DRAWN	BLF	6/18
CHECKED	JFK/AT	6/18

PINAL COUNTY DEPARTMENT OF PUBLIC WORKS
ENGINEERING BRANCH

General Notes & Legend

LOCATION: Proposed Mountain View Estates Access Road (unamed)

Registered Professional Engineer (Civil) CERTIFICATE NO. 22884 JOHN FRANK KRAFT JR. 6-7-18 ARIZONA U.S.A.

6-7-18

DRAWING NO: G2

F.H.W.A. REGION	STATE	PROJECT NO.	SHEET NO.	TOTAL SHEETS	AS BUILT
9	AZ	60640562	3	19	

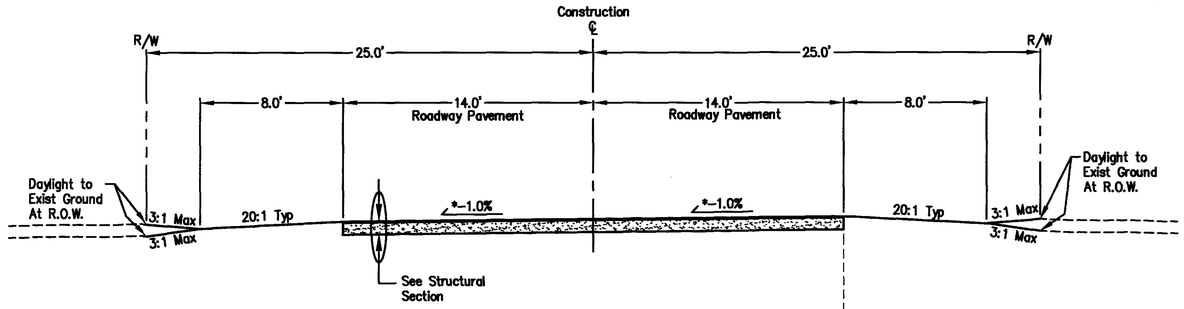

TYPICAL ROADWAY SECTION – 1

Sta 10+05 to 28+37.5
Sta 35+79.5 to 36+75.6
*Transition from Sta 10+05 (Match Exist Section) to Sta 10+25 (-1.0% Left)
*Transition from Sta 27+95.5 (-1.0% Left) to Sta 28+37.5 (-1.0% Right)
*Transition from Sta 36+56.5 (-1.0%) to Sta 36+75.6 (Match Exist Section)

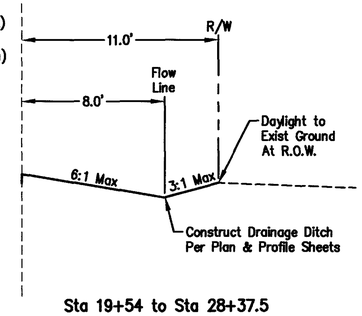

Sta 19+54 to Sta 28+37.5

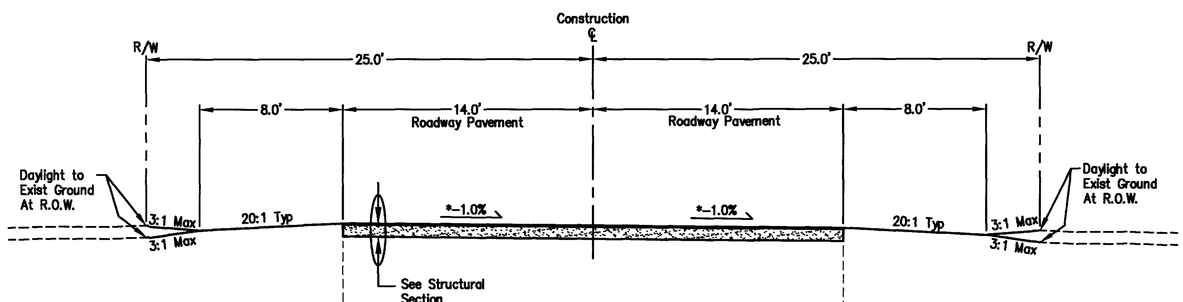

TYPICAL ROADWAY SECTION – 2

Sta 28+37.5 to 35+79.5
*Transition from Sta 35+37.5 (-1.0% Right) to Sta 35+79.5 (-1.0% Left)

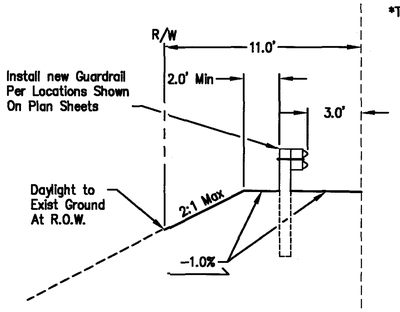

Sta 29+38 to Sta 34+38

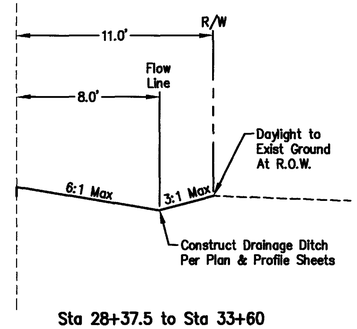

Sta 28+37.5 to Sta 33+60

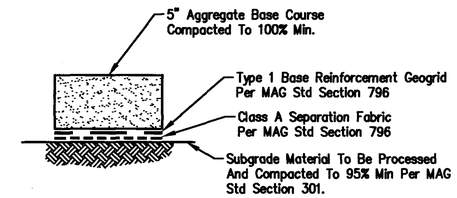

TYPICAL PAVEMENT STRUCTURAL SECTION

BID ALTERNATES

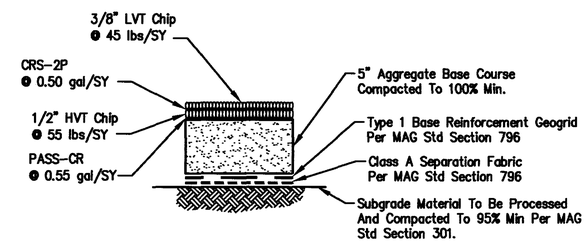

TYPICAL PAVEMENT STRUCTURAL SECTION

BID ALTERNATE 1

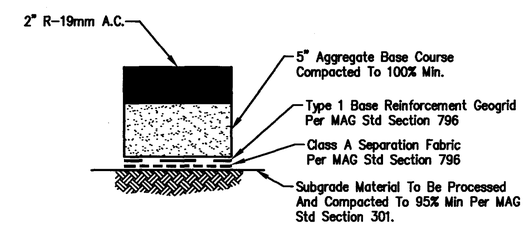

TYPICAL PAVEMENT STRUCTURAL SECTION

BID ALTERNATE 2

	NAME	DATE
DESIGN	JFK/AT/BLF	6/16
DRAWN	BLF	6/16
CHECKED	JFK/AT	6/16

PINAL COUNTY DEPARTMENT OF PUBLIC WORKS
ENGINEERING BRANCH

Typical Section's & Structural Section

LOCATION: Proposed Mountain View Estates Access Road (unamed)

Registered Professional Engineer (Civil) CERTIFICATE NO. 22884 JOHN FRANK KRAFT JR. Date Signed 6-30-16 ARIZONA U.S.A.

DRAWING NO: DS1

6-30-18

6/9/2016 MountainViewEstatesAccessRd_PLANSHEETS_Cover-Details-P&P.dwg S04 - S1

F.H.W.A. REGION	STATE	PROJECT NO.	SHEET NO.	TOTAL SHEETS	AS BUILT
9	AZ	60640562	4	19	

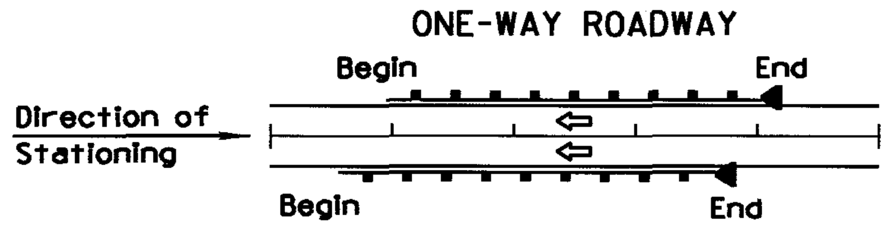

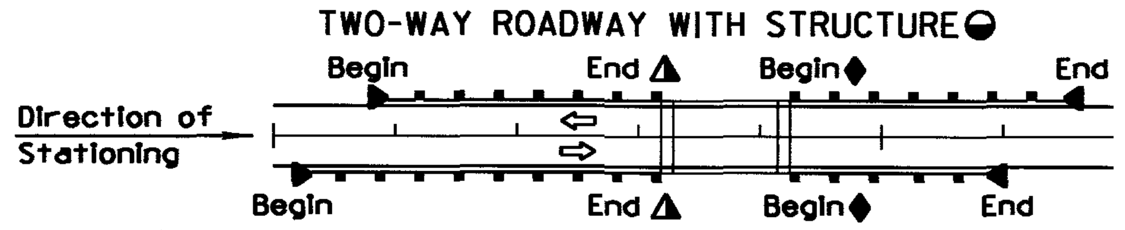

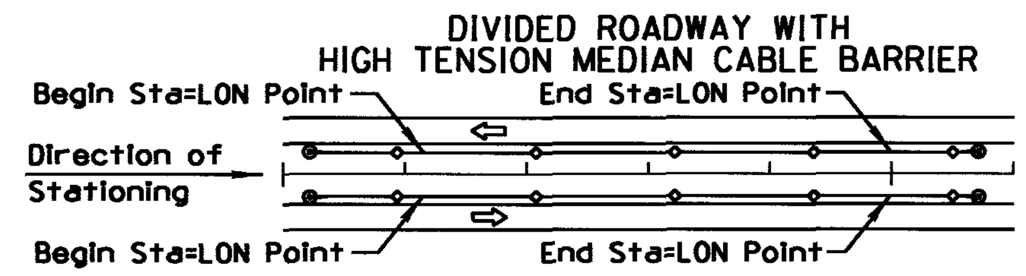

LOCATION						BARRIER: NEW GUARDRAIL				BARRIER: EXISTING GUARDRAIL					BARRIER: CONCRETE BARRIER								BARRIER: CABLE			TRANSITION: RAIL (Each) / CONC BARRIER (Each)					END TREATMENT: NEW (Each ◪)						END TREATMENT: EXISTING (Action)				END TREATMENT: EXISTING (Each ◪)							REMARKS
Begin Station (Approximate) (0)	Plan Reference Number ◇	Type "A" C-10.01, Type "B" C-10.02	~~C-10.03~~ (Timber) Detail C	C-10.04 (Steel)	Detail **	Length (Linear Feet) (0.0)	C-10.06 Nested W-Beam ▲ Length (Linear Feet) (0.0)	C-10.07 Bolted Anchor (Each)	Shop Curved Guardrail Length (Linear Feet) (0.0)	Reconstruct-Exst Post, Block Length (Linear Feet) (0.0)	Reconstruct-New Post, Block Length (Linear Feet) (0.0)	Remove and Salvage Length (Linear Feet) (0.0)	Construct from Salvage Length (Linear Feet) (0.0)	Remove Length (Linear Feet) (0.0)	Length (Linear Feet) (0.0)	C-10.40 (32" Median)	C-10.41 (42" Median)	C-10.50 (32" Half)	C-10.54 (32" Half at Piers)	C-10.55 (42" Half at Piers)	Detail	Remove Existing Length (Linear Feet) (0.0)	High-Tension Cable Barrier ● Length (Linear Feet) (0)	C-12.30 Chain-Link Cable Barrier Length (Linear Feet) (0.0)	Begin = Treatment at Beginning End = Treatment at End	C-10.30 Thrie Beam	Reconstruct Rub Rail	C-10.70 32" or C-10.72 42"	C-10.74 42" to 32"	Detail	Tangent Details D and (N/A) ◧	Flared Details and ◧	End Anchor C-10.08 or Detail	High-Tension Cable Terminal	Sand Barrels C-1 or Detail	Attenuator Detail ■	Reconstruct (See Special Prv)	Remove and Salvage	Construct from Salvage	Remove	Tangent	Flared	End Anchor C-10.08 or Detail	High-Tension Cable Terminal	Sand Barrels C-1 or Detail	Attenuator Detail ■	BCT (L=12.5')	
29+38 Lt	1	**	X		B	400																			Begin						1																	See Details A, B, C, and D.
																									End						1																	
																									Begin																							
																									End																							
																									Begin																							
																									End																							
																									Begin																							
																									End																							
																									Begin																							
																									End																							
																									Begin																							
																									End																							
																									Begin																							
																									End																							
																									Begin																							
																									End																							
																									Begin																							
																									End																							
																									Begin																							
																									End																							
																									Begin																							
																									End																							
																									Begin																							
																									End																							
																									Begin																							
																									End																							
Sheet Total																																																

THE ZEROS IN PARENTHESES (0.0) INDICATE THE DIMENSIONAL PRECISION FOR THAT COLUMN

▲ THE LENGTH OF NESTED W-BEAM IS FOR TYPES 2 OR 3 (37.5'). DETERMINATION OF TYPE (1, 2 or 3) TO USE IS MADE IN THE FIELD. THE PAY QUANTITY IS THE LENGTH INSTALLED PER STD. C-10.06 (25.0' or 37.5')

◭ END STATION BEFORE BRIDGE TRANSITION

◆ BEGIN STATION AFTER BRIDGE TRANSITION

◒ SEE BRIDGE SHEETS FOR BRIDGE BARRIER DETAILS AND QUANTITIES

● LENGTH IS FROM LENGTH OF NEED (LON) POINT TO LON POINT. ACTUAL SEGMENT LENGTH VARIES DEPENDING ON TERMINAL TYPE. SEE SPECIAL PROVISIONS.

◪ ALLOWABLE END TREATMENT OPTIONS ARE INDICATED WITH THE NUMBER '1' IN THE SPACE. BLANK SPACES ARE NOT VIABLE ALTERNATIVES

■ ARRAY TYPE AND ANGLE IS NOTED UNDER 'REMARKS'

◧ NOTE: FOR RECORD DRAWING PREPARATION - CIRCLE END TREATMENT INSTALLED

	NAME	DATE
DESIGN	JFK/AT/BLF	6/16
DRAWN	BLF	6/16
CHECKED	JFK/AT	6/16

PINAL COUNTY DEPARTMENT OF PUBLIC WORKS
ENGINEERING BRANCH

Barrier Summary Sheet

LOCATION: Proposed Mountain View Estates Access Road (unamed)

Registered Professional Engineer (Civil) CERTIFICATE NO. 22884 JOHN FRANK KRAFT JR. 6-9-16 Signed ARIZONA U.S.A.

6-30-18

DRAWING NO: S1

F.H.W.A. REGION	STATE	PROJECT NO.	SHEET NO.	TOTAL SHEETS	AS BUILT
9	AZ	60640562	5	19	

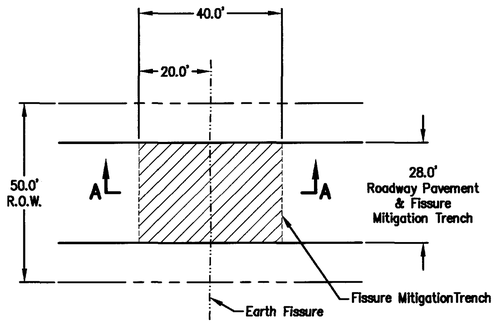

TYPICAL FISSURE MITIGATION – PLAN VIEW

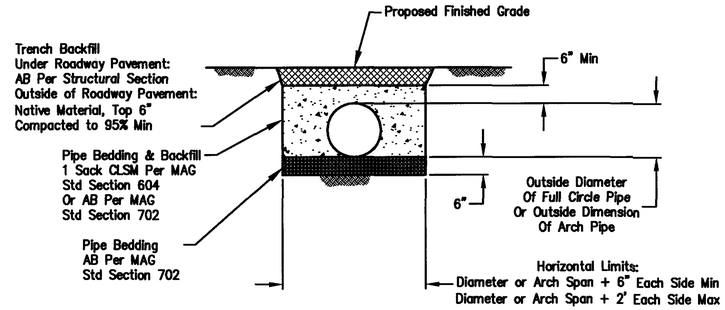

TYPICAL PIPE INSTALLATION

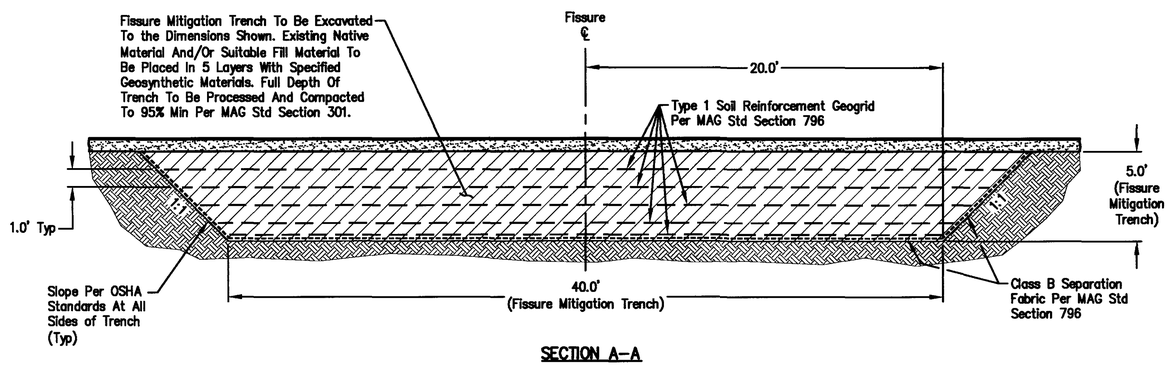

SECTION A–A

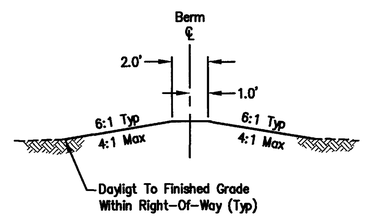

BERM DETAIL

	NAME	DATE
DESIGN	JFK/AT/BLF	6/16
DRAWN	BLF	6/16
CHECKED	JFK/AT	6/16

PINAL COUNTY DEPARTMENT OF PUBLIC WORKS
ENGINEERING BRANCH

Detail Sheet

LOCATION: Proposed Mountain View Estates Access Road (unamed)

Registered Professional Engineer (Civil) CERTIFICATE NO. 22884 JOHN FRANK KRAFT JR. Date Signed 6-7-16 ARIZONA U.S.A.

DRAWING NO: D1

6-30-18

F.H.W.A. REGION	STATE	PROJECT NO.	SHEET NO.	TOTAL SHEETS	AS BUILT
9	AZ	60640562	6	19	

GENERAL NOTES

1. Lengths as shown unless otherwise indicated on project plans.
2. Post type (timber or steel) for transitions shall match post type of adjoining guardrail.

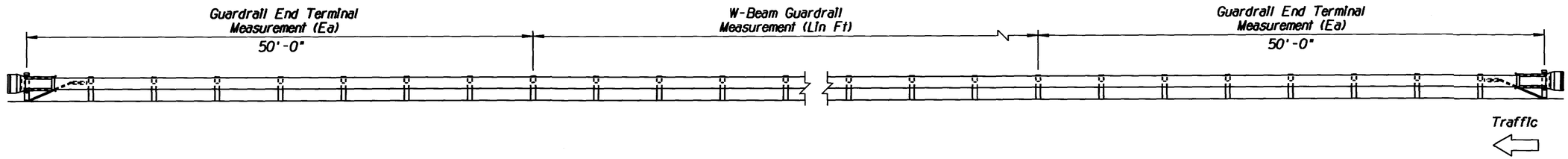

DETAIL A

GUARDRAIL MEASUREMENT LIMITS

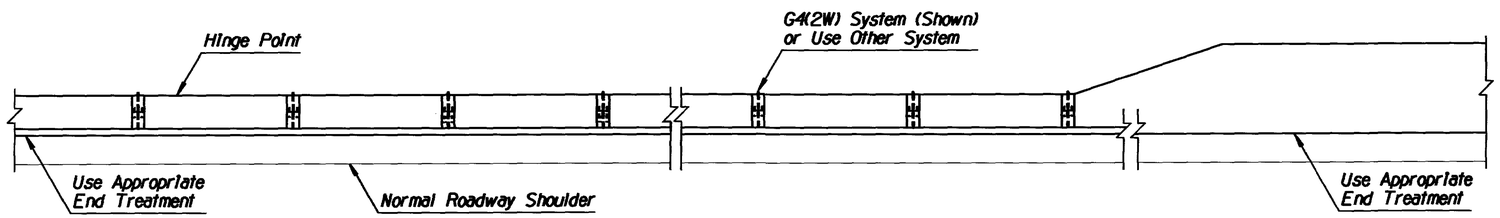

PLAN

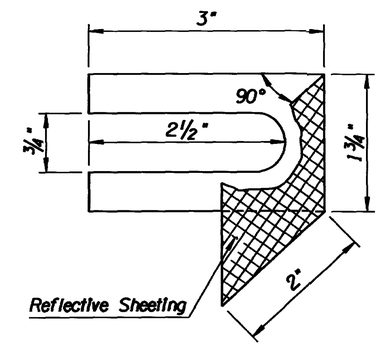

REFLECTOR TAB DETAIL

GENERAL NOTES

1. See Detail A for measurement limits.
2. See Std Specs 703, 905 and 1012-3 for reflector tab and snow marker materials, reflective sheeting, and spacing requirements.

▲ Top of Rail = 28"
See General Note 1
Detail C

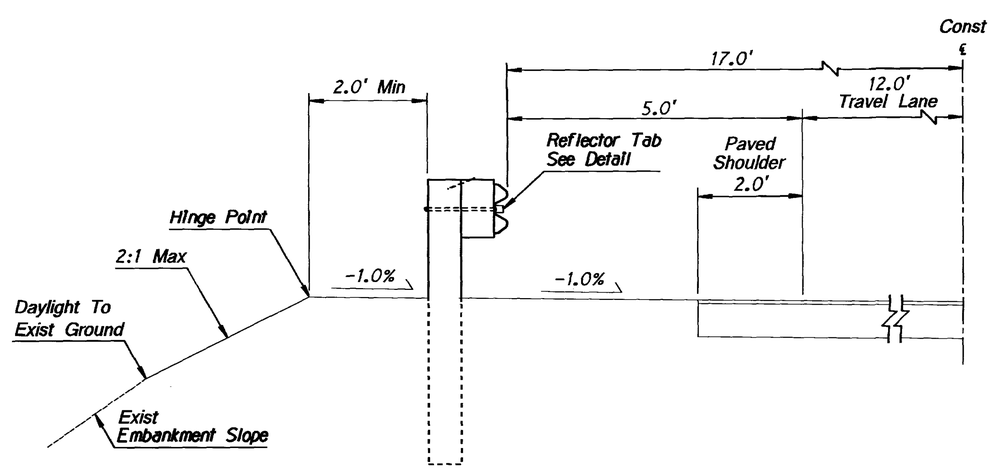

TYPICAL GUARDRAIL SECTION

DETAIL B

GUARDRAIL INSTALLATION
TYPICAL GUARDRAIL SECTION AND REFLECTOR TAB

	NAME	DATE	PINAL COUNTY DEPARTMENT OF PUBLIC WORKS ENGINEERING BRANCH
DESIGN	JFK/AT/BLF	6/16	
DRAWN	BLF	6/16	
CHECKED	JFK/AT	6/16	Detail Sheet
LOCATION	Proposed Mountain View Estates Access Road (unamed)		DRAWING NO: D2

Registered Professional Engineer (Civil) CERTIFICATE NO. 22884 JOHN FRANK KRAFT JR. Date Signed 6-9-16 ARIZONA U.S.A.

6-30-18

F.H.W.A. REGION	STATE	PROJECT NO.	SHEET NO.	TOTAL SHEETS	AS BUILT
9	AZ	60640562	7	19	

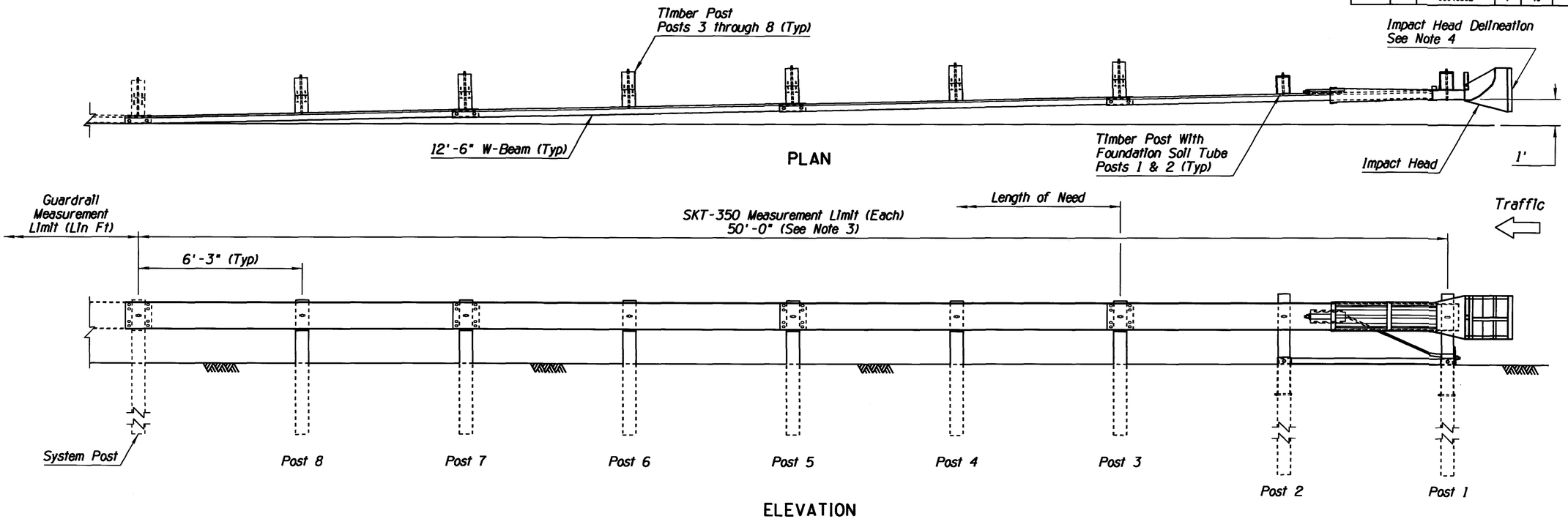

PLAN

ELEVATION

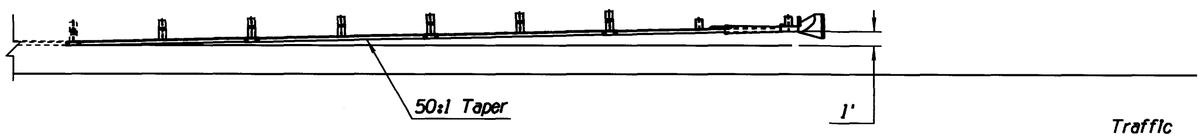

TYPICAL GUARDRAIL INSTALLATION
(FACE OF RAIL OFFSET 17.0' FROM CONST CL)

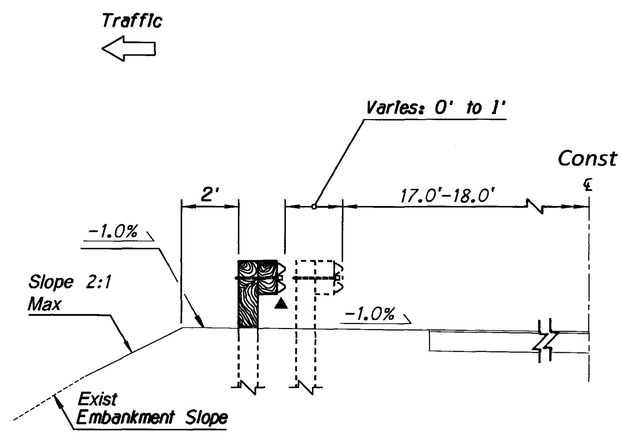

TYPICAL GUARDRAIL SECTION

▲ Top of Rail = 28"
See General Note 1
Detail C

GENERAL NOTES

1. This detail is for roadway layout only.
2. The SKT-350 shall be installed in accordance with the manufacturer's specifications and current approved drawings including all details, hardware, hardware quantities, and other information.

   The current manufacturer's approved drawing is number SKT-W-2US-AZ, 06/04/11. Visit the Roadway Design web site to view and print the drawing.
3. The 50' W-Beam length shall consist of four 12'-6" sections, the end section being a proprietary split rail.
4. See specifications and Traffic Signing and Marking Standard Drawings.

DETAIL D

LAYOUT FOR SKT-350
2 FOUNDATION SOIL TUBES

	NAME	DATE
DESIGN	JFK/AT/BLF	6/16
DRAWN	BLF	6/16
CHECKED	JFK/AT	6/16

PINAL COUNTY DEPARTMENT OF PUBLIC WORKS
ENGINEERING BRANCH

Detail Sheet

LOCATION: Proposed Mountain View Estates Access Road (unamed)

DRAWING NO: D3

6-30-18

FHWA REGION	STATE	PROJECT NO.	SHEET NO.	TOTAL SHEETS	AS BUILT
9	AZ	60640562	8	19	

G4(1W) SYSTEM (8"x8")

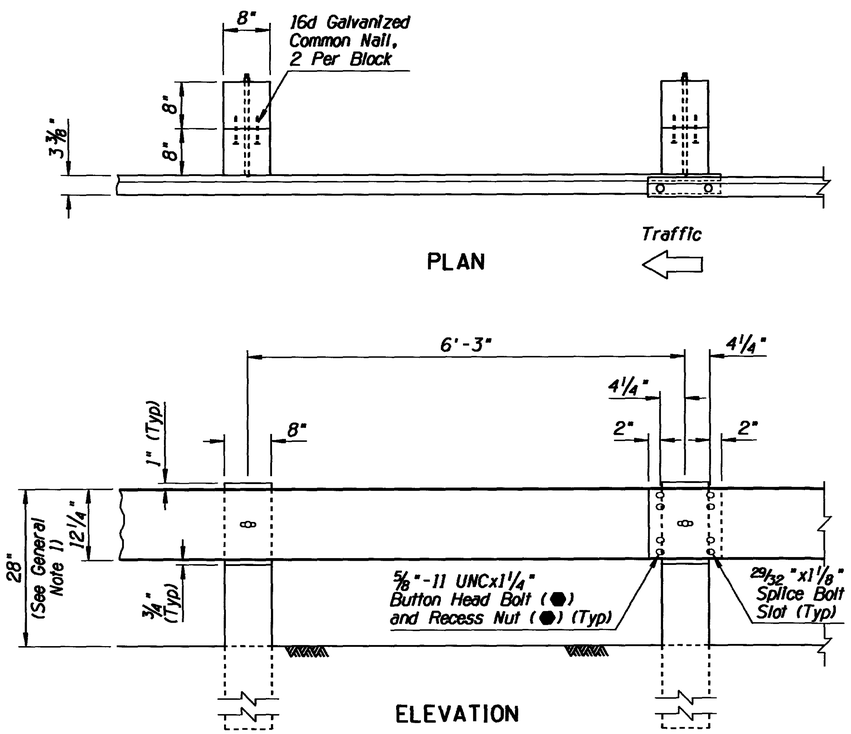

G4(1W) SYSTEM (8"x8")

G4(2W) SYSTEM (6"x8")

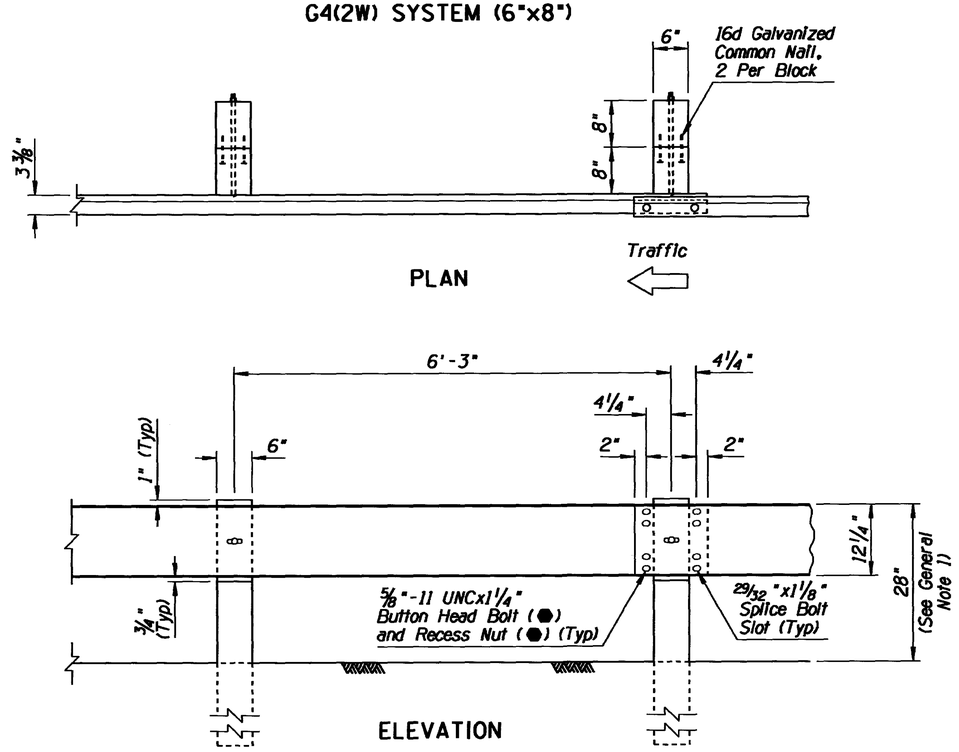

G4(2W) SYSTEM (6"x8")

GENERAL NOTES

1. The control height for guardrail system is 28" to the top of rail, measured at the face of rail from the normal finished shoulder elevation.
2. Guardrail shall be lapped in the direction of adjacent traffic.

● - Indicates AASHTO, AGC & ARTBA Task Force 13 Report designation

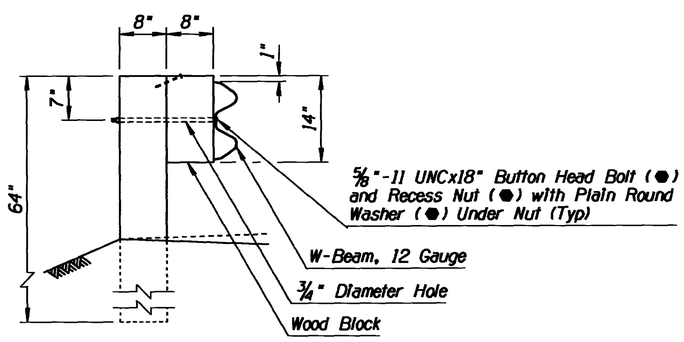

SECTION G4(1W)

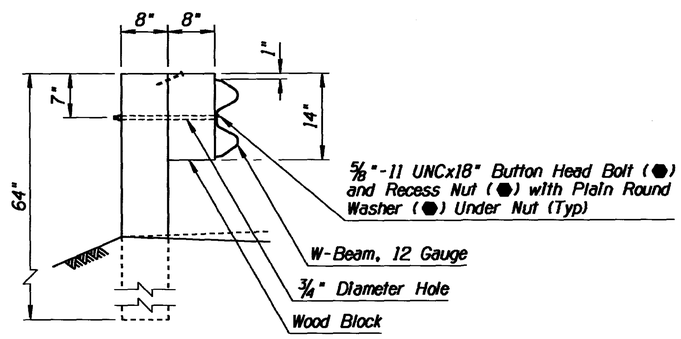

SECTION G4(2W)

DETAIL C

W-BEAM GUARDRAIL
G4(1W) AND G4(2W)
BLOCKED-OUT TIMBER POST

	NAME	DATE	PINAL COUNTY DEPARTMENT OF PUBLIC WORKS ENGINEERING BRANCH
DESIGN	JFK/AT/BLF	6/14	
DRAWN	BLF	6/14	
CHECKED	JFK/AT	6/14	Detail Sheet
LOCATION			Proposed Mountain View Estates Access Road (unnamed)

Registered Professional Engineer (Civil) CERTIFICATE NO. 22884 JOHN FRANK SKRAFT JR. 6-3-16 Date Signed ARIZONA U.S.A.

DRAWING NO: D4

6-3-18

STATE	PROJECT NO.	SHEET NO.	TOTAL SHEETS	AS BUILT
AZ	60640562	9	19	

MV Estates Access.dwg Layout2

120 0 120 240
Scale Feet

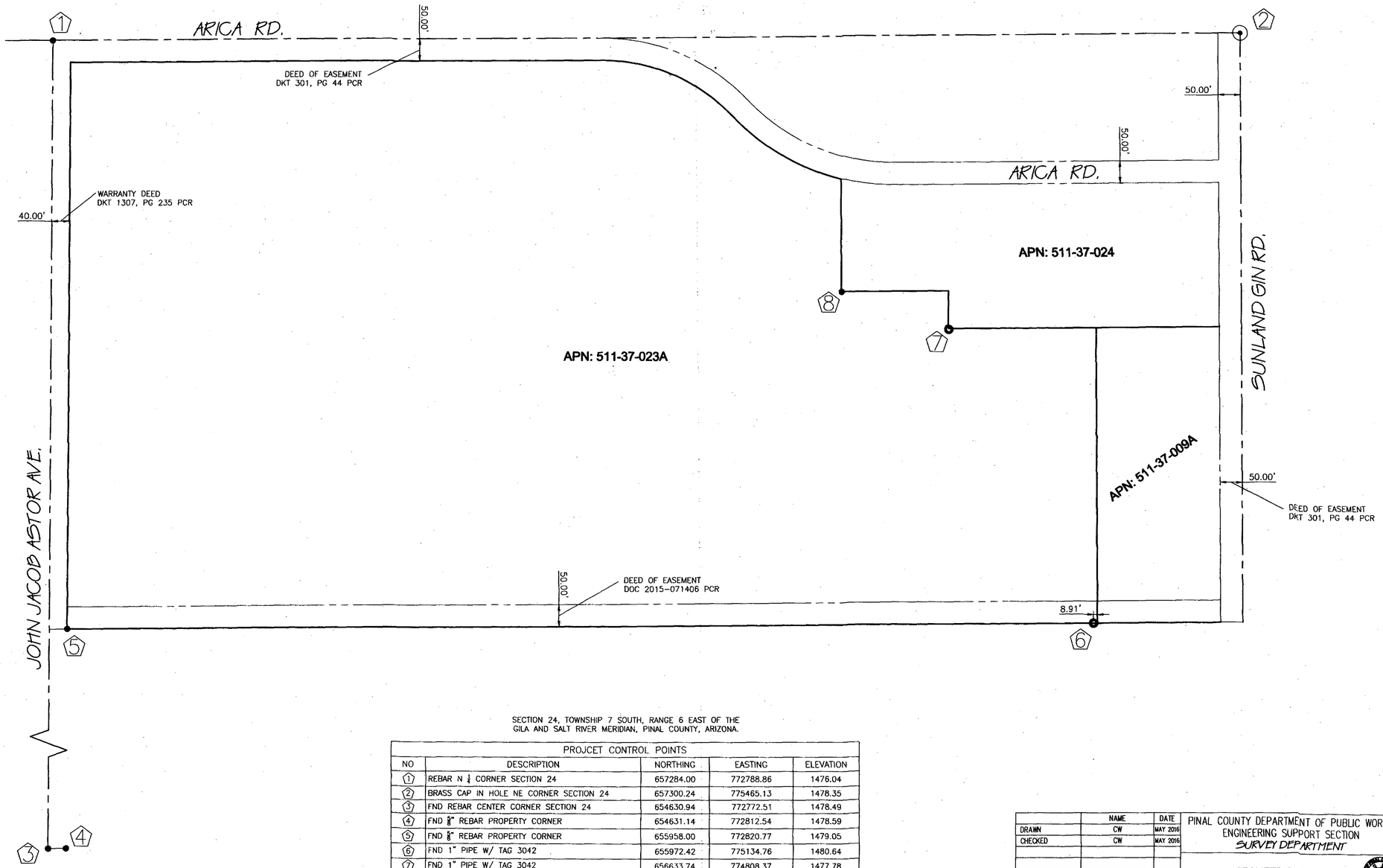

SECTION 24, TOWNSHIP 7 SOUTH, RANGE 6 EAST OF THE GILA AND SALT RIVER MERIDIAN, PINAL COUNTY, ARIZONA.

PROJCET CONTROL POINTS

NO	DESCRIPTION	NORTHING	EASTING	ELEVATION
1	REBAR N ¼ CORNER SECTION 24	657284.00	772788.86	1476.04
2	BRASS CAP IN HOLE NE CORNER SECTION 24	657300.24	775465.13	1478.35
3	FND REBAR CENTER CORNER SECTION 24	654630.94	772772.51	1478.49
4	FND 5/8" REBAR PROPERTY CORNER	654631.14	772812.54	1478.59
5	FND 5/8" REBAR PROPERTY CORNER	655958.00	772820.77	1479.05
6	FND 1" PIPE W/ TAG 3042	655972.42	775134.76	1480.64
7	FND 1" PIPE W/ TAG 3042	656633.74	774808.37	1477.78
8	FND ½" REBAR	656718.69	774566.90	1479.10

	NAME	DATE
DRAWN	CW	MAY 2016
CHECKED	CW	MAY 2016

PINAL COUNTY DEPARTMENT OF PUBLIC WORKS
ENGINEERING SUPPORT SECTION
SURVEY DEPARTMENT

GEOMETRIC CONTROL

LOCATION

MOUNTAIN VIEW ESTATES ACCESS ROAD

REGISTERED LAND SURVEYOR
CERTIFICATE NO.
49218
CHRISTOPHER WILK
DATE SIGNED 05/31/16
ARIZONA U.S.A.
EXPIRES 03/31/2017

DRAWING NO: SV1

6/8/2018 MountainViewEstatesAccessRd_PLANSHEETS_Cover-Details-P&P.dwg S10 – P1

F.H.W.A. REGION	STATE	PROJECT NO.	SHEET NO.	TOTAL SHEETS	AS BUILT
9	AZ	60640562	10	19	

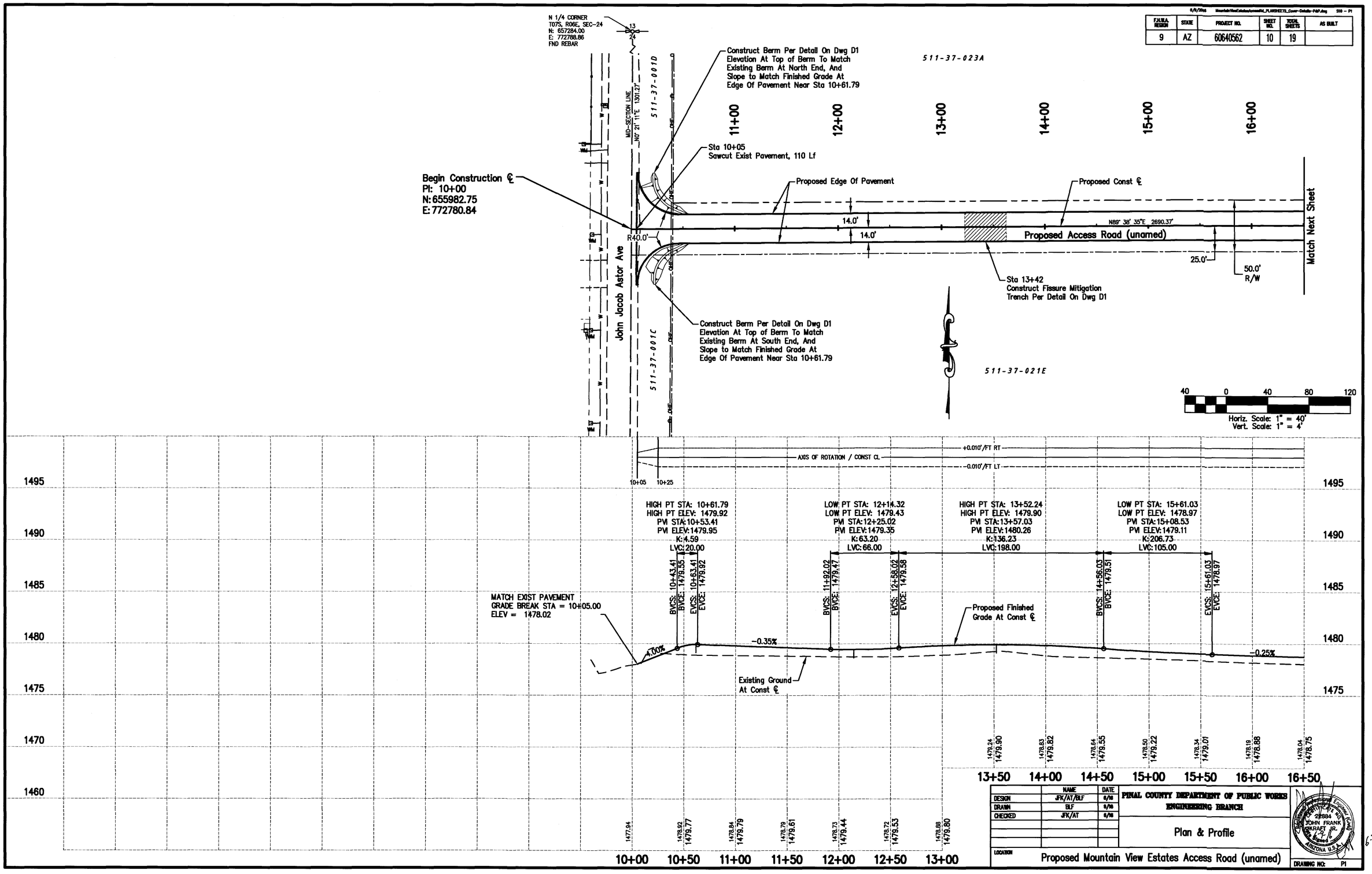

	NAME	DATE
DESIGN	JFK/AT/BLF	6/18
DRAWN	BLF	6/18
CHECKED	JFK/AT	6/18

PINAL COUNTY DEPARTMENT OF PUBLIC WORKS
ENGINEERING BRANCH

Plan & Profile

LOCATION: Proposed Mountain View Estates Access Road (unamed)

Registered Professional Engineer (Civil) CERTIFICATE NO. 22884 JOHN FRANK SKRAEP JR. Date Signed 6-20-18 ARIZONA U.S.A.

DRAWING NO: P1

F.H.W.A. REGION	STATE	PROJECT NO.	SHEET NO.	TOTAL SHEETS	AS BUILT
9	AZ	60640562	11	19	

511-37-023A

17+00 18+00 19+00 20+00 21+00 22+00 23+00 24+00 25+00 26+00 27+00 28+00

Match Previous Sheet

Proposed Edge Of Pavement

Proposed Const ℄

N89° 38' 35"E 2690.37'

14.0'

14.0'

Proposed Access Road (unamed)

25.0'

50.0' R/W

Match Next Sheet

Sta 19+54
Begin Drainage Ditch

Sta 21+54
Construct Fissure Mitigation
Trench Per Detail On Dwg D1

Sta 20+06
Construct Fissure Mitigation
Trench Per Detail On Dwg D1

Construct Drainage Ditch
From Sta 19+54 to 33+60
Per Typical Section On Dwg D1

511-37-021D

511-37-011

40 0 40 80 120

Horiz. Scale: 1" = 40'
Vert. Scale: 1" = 4'

+0.010'/FT RT

AXIS OF ROTATION / CONST CL

-0.010'/FT LT

27+95.5 28+37.5

1495 1490 1485 1480 1475 1470 1460

LOW PT STA: 19+53.52
LOW PT ELEV: 1478.03
PVI STA:19+65.72
PVI ELEV:1477.95
K:158.74
LVC:105.00

BVCS: 19+13.22
BVCE: 1478.08

EVCS: 20+18.22
EVCE: 1478.16

GRADE BREAK STA = 21+50.00
ELEV = 1478.70

GRADE BREAK STA = 28+00.00
ELEV = 1479.67

-0.25%

0.41%

0.15%

0.15%

Proposed Finished Grade At Const ℄

Existing Ground At Const ℄

Begin Flow Line Of Proposed Drainage Ditch
STA = 19+54
ELEV = 1477.17

Proposed Finished Grade At Flow Line Of Drainage Ditch. Grade To Drain @ 0.15% From Sta 19+54 to 33+60

Proposed Finished Grade At Flow Line Of Drainage Ditch

1478.06	1478.14	1478.21	1478.29	1478.36	1478.44	1478.51	
1479.30	1479.37	1479.45	1479.52	1479.60	1479.67	1479.77	
25+50	26+00	26+50	27+00	27+50	28+00	28+50	

Proposed Finished Grade At Flow Line Of Drainage Ditch

1477.23	1477.31	1477.38	1477.46	1477.53	1477.61	1477.69	1477.76	1477.84	1477.91	1477.99	
1478.04	1477.94	1477.75	1477.61	1477.53	1477.42	1477.30	1477.34	1477.48	1477.86	1478.39	1478.67
1478.75	1478.62	1478.50	1478.37	1478.24	1478.11	1478.03	1478.10	1478.29	1478.49	1478.70	1478.77
16+50	17+00	17+50	18+00	18+50	19+00	19+50	20+00	20+50	21+00	21+50	22+00

1478.27	1478.28	1478.34	1478.39	1478.49	1478.39						
1478.85	1478.92	1479.00	1479.07	1479.15	1479.22						
22+50	23+00	23+50	24+00	24+50	25+00						

	NAME	DATE
DESIGN	JFK/AT/BLF	6/10
DRAWN	BLF	6/10
CHECKED	JFK/AT	6/10

PINAL COUNTY DEPARTMENT OF PUBLIC WORKS
ENGINEERING BRANCH

Plan & Profile

LOCATION: Proposed Mountain View Estates Access Road (unamed)

DRAWING NO: P2

Registered Professional Engineer (Civil) CERTIFICATE NO. 22684 JOHN FRANK STUART JR. Date Signed 6-9-10 ARIZONA U.S.A.

6-30-10

F.H.W.A. REGION	STATE	PROJECT NO.	SHEET NO.	TOTAL SHEETS	AS BUILT
9	AZ	60640562	12	19	

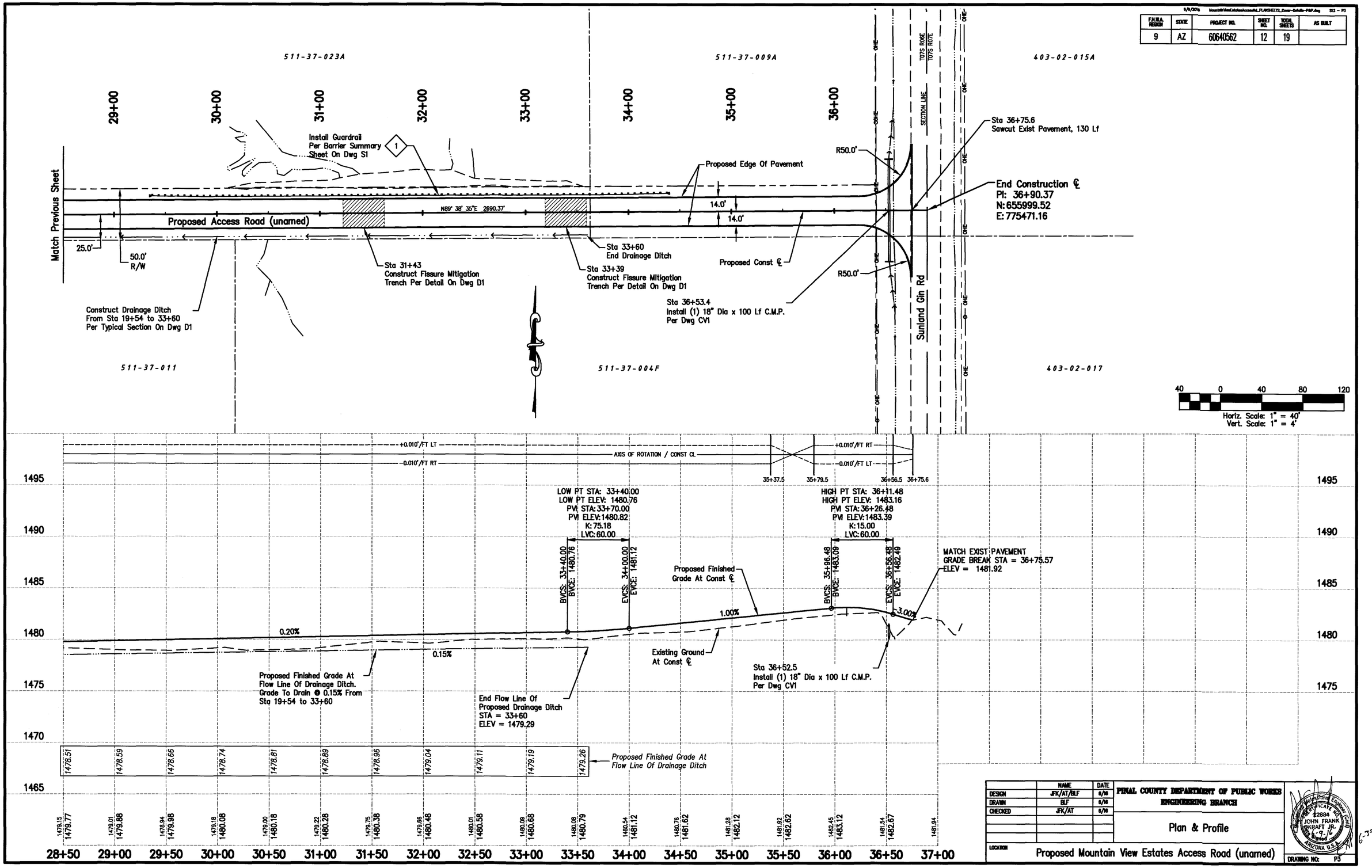

	NAME	DATE
DESIGN	JFK/AT/BLF	6/16
DRAWN	BLF	6/16
CHECKED	JFK/AT	6/16

PINAL COUNTY DEPARTMENT OF PUBLIC WORKS
ENGINEERING BRANCH

Plan & Profile

LOCATION: Proposed Mountain View Estates Access Road (unamed)

DRAWING NO: P3

6-30-18

F.H.W.A. REGION	STATE	PROJECT NO.	SHEET NO.	TOTAL SHEETS	AS BUILT
9	AZ	60640562	13	19	

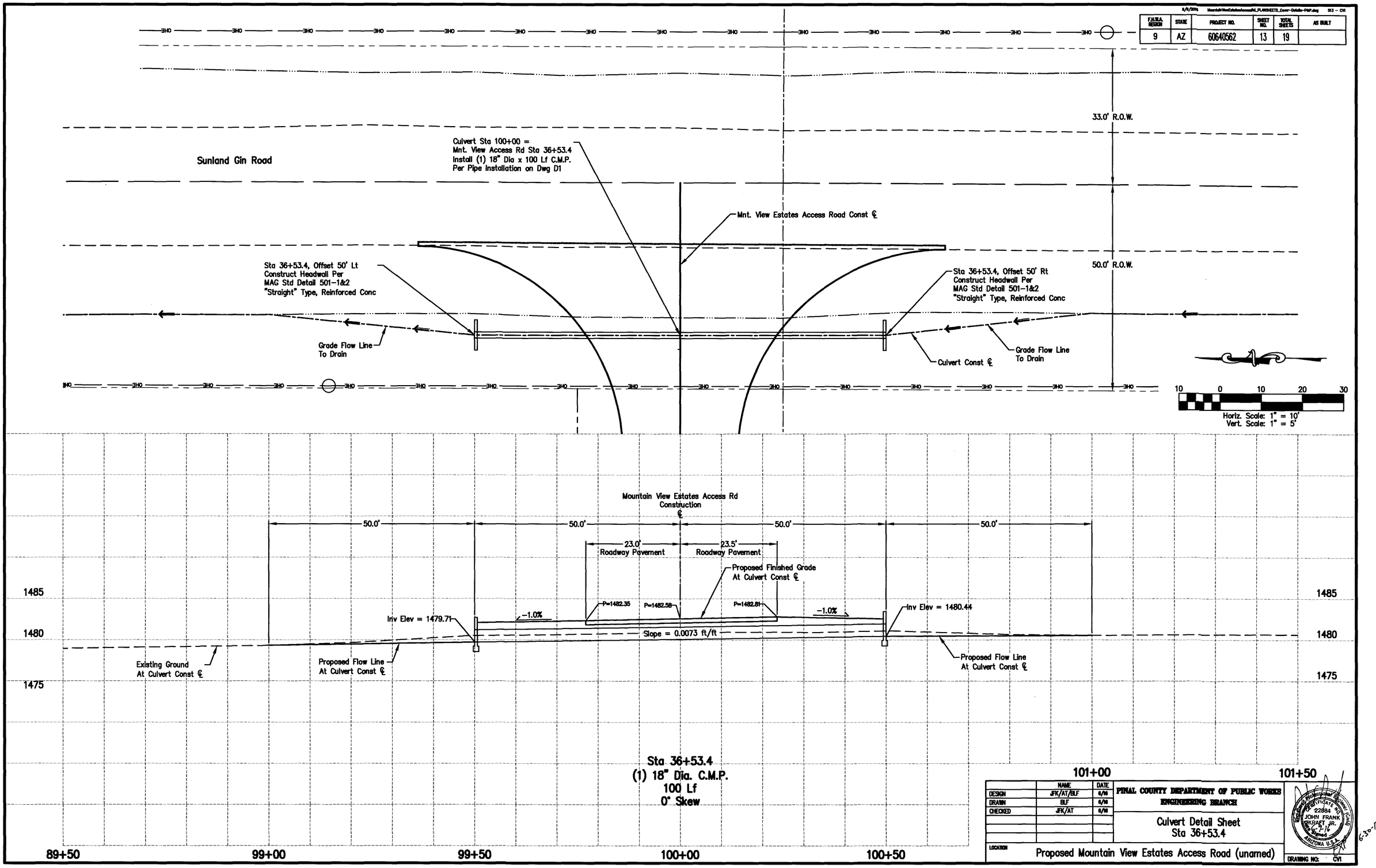

	NAME	DATE
DESIGN	JFK/AT/BLF	6/16
DRAWN	BLF	6/16
CHECKED	JFK/AT	6/16

PINAL COUNTY DEPARTMENT OF PUBLIC WORKS
ENGINEERING BRANCH

Culvert Detail Sheet
Sta 36+53.4

LOCATION: Proposed Mountain View Estates Access Road (unamed)

DRAWING NO: CV1

6-30-18

F.H.W.A. REGION	STATE	PROJECT NO.	SHEET NO.	TOTAL SHEETS	AS BUILT
9	AZ	60640562	14	19	

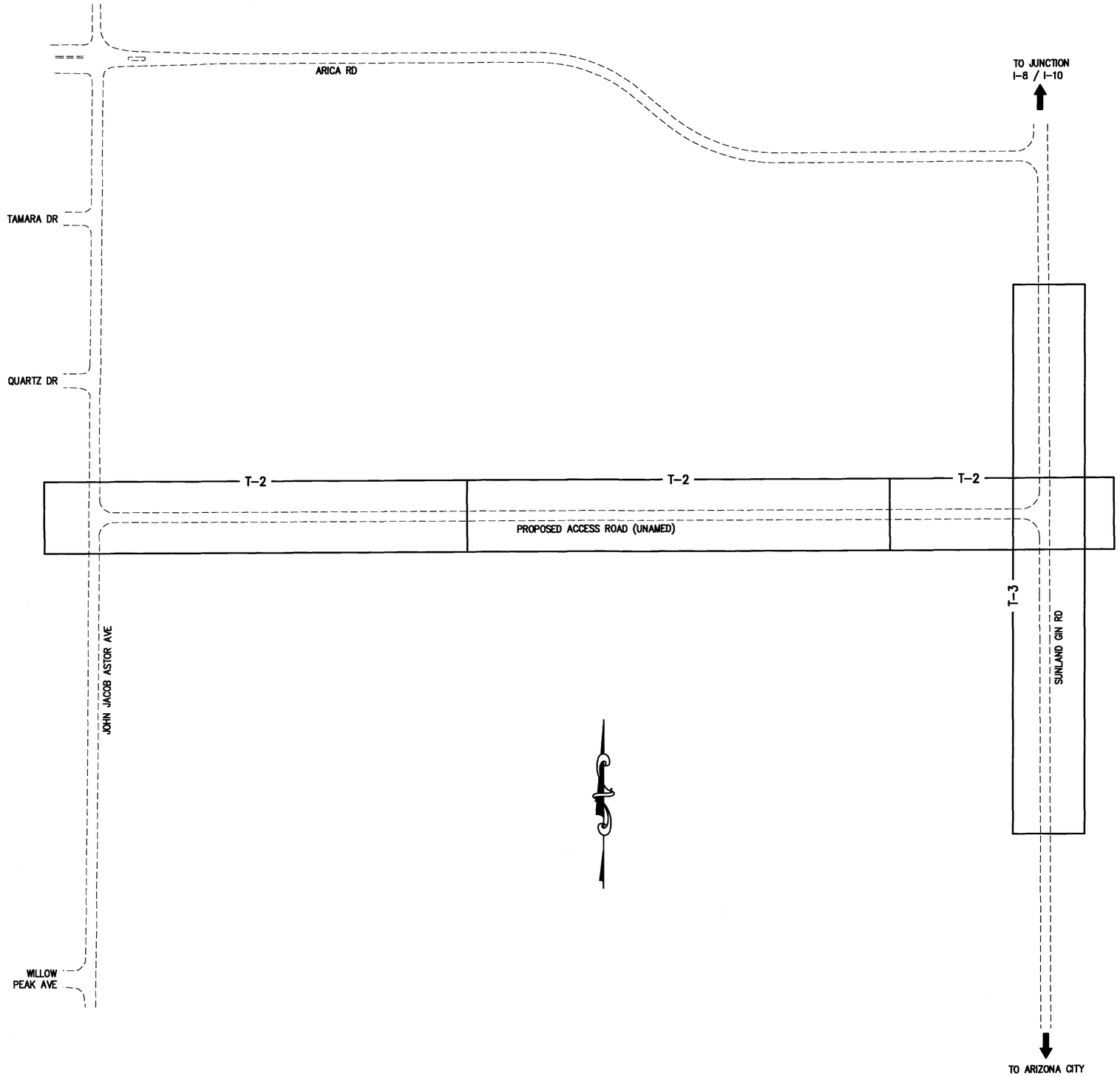

GENERAL NOTES:

1. Existing pavement markings that require removal shall be obliterated by sandblasting per ADOT sec. 701-3.06.
2. Standard reflectorized traffic paint used for all pavement markings to be applied per the technical provisions for this project.
3. The dimensions shown to pavement striping are to the center of the striping.
4. The roadway surface shall be cleaned by sweeping immediately prior to the placement of all pavement markings and the roadway surface shall be dry.
5. Mounting height of signs shall be 7' from top of pavement (at nearest edge of road) to bottom edge of sign, unless otherwise noted. Mounting height of object markers (OM-3R/L) shall be 4' from the ground to bottom edge of marker.
8. Lateral offset of signs shall be 10' from nearest edge of pavement, unless otherwise noted. If an object marker is used to mark a culvert or other obstruction adjacent to the roadway, the edge of the object marker that is closest to the roadway shall be installed in line with the closest edge of the obstruction.
9. All signs shall be installed on 2" square tubing with concrete foundation per ADOT signing & marking standard drawing S-3, Sheet 15 of 16.
10. All signs shall be fabricated using retroreflective sheeting attached to standard aluminum sign blanks (size per MUTCD as noted on plan) as required by the technical specifications for this project.
11. All raised pavement markers shall be installed so that the reflective face of each marker is facing the direction of traffic and is perpendicular to the direction of traffic flow.
12. Where raised pavement markers are placed along solid striping, the nearest edge of each marker shall be offset two inches from the nearest edge of the striping. Where raised pavement markers are placed between double yellow striping, they shall be centered in the 6" gap between the lines. Where raised pavement markers are placed along broken lane line striping, they shall be centered within the gaps.
13. All raised pavement markers shall have an abrasion-resistance coating on the face of the prismatic reflectors and shall conform to the details of ADOT signing and marking standard drawing M-19. They shall be installed with a bituminous adhesive from the ADOT approved products list. (http://www.azdot.gov/docs/default-source/approved-products/apl201604)
14. Existing raised pavement markers on Sunland Gin Rd shall be protected from overspray during placement of centerline pavement markings.
15. Existing posted speed:
    - John Jacob Astor Ave = 25mph.
    - Sunland Gin Rd = 25mph/35mph/50mph

Estimated Quaintities

Pavement Markings	Signs	Raised Pavement Markers
New Pavement Markings:	New Signs:	Type D Markers
8,148 LF 6" White Lines	(2) R1-1, 36"x36", "STOP"	34
4,054 LF 6" Yellow Lines	(3) R2-1, 24"x30" "SPEED LIMIT 35"	
54 LF 18" White Stop Bar	(3) W14-3, 48"x48"x36", "NO PASSING ZONE"	
	(1) W1-7, 48"x24", "TWO-DIRECTION LARGE ARROW"	
Obliterate Existing Markings:	(2) W8-103 ADOT, 48"x24", "DO NOT ENTER WHEN FLOODED"	
485 LF 6" Lines	(1) OM3-L, 12"x36", "TYPE 3 OBJECT MARKER"	
	(1) OM3-R, 12"x36", "TYPE 3 OBJECT MARKER"	
	(2) D3-1, 8" Ht, "MOUNTAIN VIEW AVE"	
	(1) D3-1, 8" Ht, "JOHN JACOB ASTOR AVE"	
	(1) D3-1, 8" Ht, "SUNLAND GIN RD"	
	Relocate Existing Signs:	
	(3) R2-1, 24"x30" "SPEED LIMIT 35"	
	SKT-350 Guardrail End Terminal:	
	(2) Guardrail End Terminal Delineation Per ADOT Traffic Signing & Marking Standard Drawing M-34	

	NAME	DATE
DESIGN	JFK/AT/BLF	6/16
DRAWN	BLF	6/16
CHECKED	JFK/AT	6/16

PINAL COUNTY DEPARTMENT OF PUBLIC WORKS
ENGINEERING BRANCH

Pavement Marking & Signing Plan

LOCATION: Proposed Mountain View Estates Access Road (unamed)

Registered Professional Engineer (Civil) CERTIFICATE NO. 22884 JOHN FRANK INGRAFT, JR. Date Signed 6-7-16 ARIZONA U.S.A.

6-30-18

DRAWING NO: T1

F.H.W.A. REGION	STATE	PROJECT NO.	SHEET NO.	TOTAL SHEETS	AS BUILT
9	AZ	60640562	15	19	

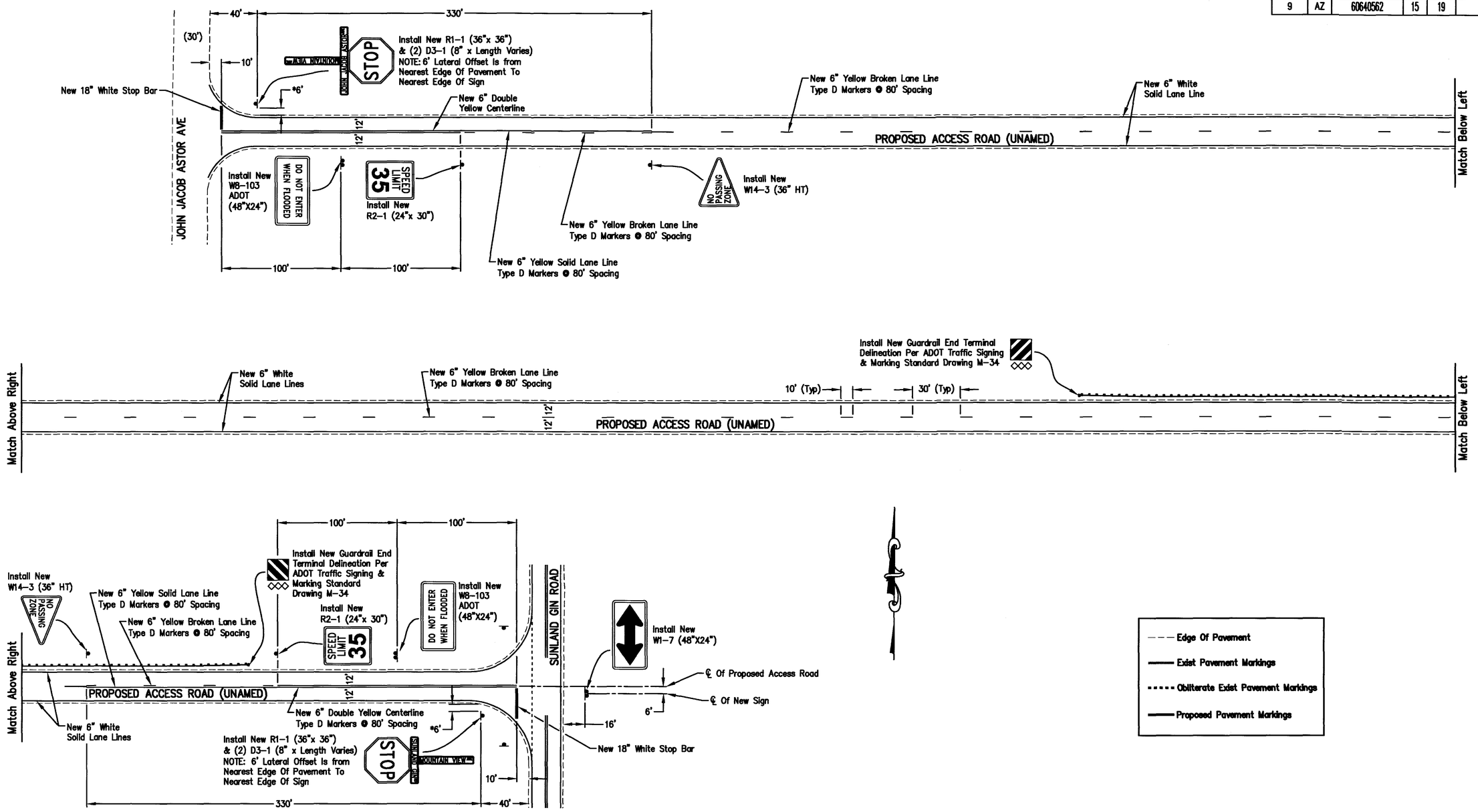

- Edge Of Pavement
- Exist Pavement Markings
- Obliterate Exist Pavement Markings
- Proposed Pavement Markings

40 0 40 80 120

Horiz. Scale: 1" = 40'

	NAME	DATE
DESIGN	JFK/AT/BLF	6/10
DRAWN	BLF	6/10
CHECKED	JFK/AT	6/10

PINAL COUNTY DEPARTMENT OF PUBLIC WORKS
ENGINEERING BRANCH

Pavement Marking & Signing Plan

LOCATION: Proposed Mountain View Estates Access Road (unamed)

Registered Professional Engineer (Civil) CERTIFICATE NO. 22884 JOHN FRANK SKRAFT JR. 6-7-16 ARIZONA U.S.A.

6-30-18

DRAWING NO: T2

F.H.W.A. REGION	STATE	PROJECT NO.	SHEET NO.	TOTAL SHEETS	AS BUILT
9	AZ	60640562	16	19	

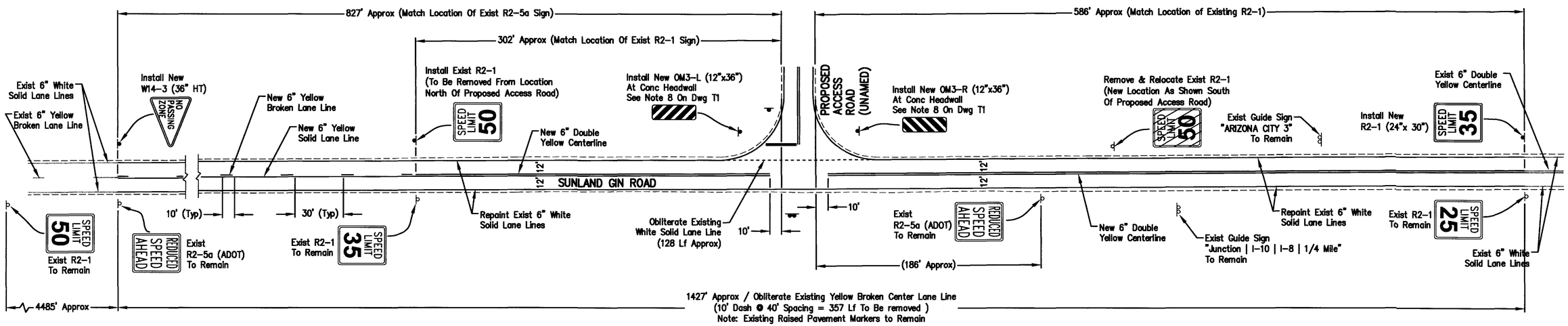

- Edge Of Pavement
- Exist Pavement Markings
- Obliterate Exist Pavement Markings
- Proposed Pavement Markings

40 0 40 80 120
Horiz. Scale: 1" = 40'

	NAME	DATE
DESIGN	JFK/AT/BLF	6/16
DRAWN	BLF	6/16
CHECKED	JFK/AT	6/16

PINAL COUNTY DEPARTMENT OF PUBLIC WORKS
ENGINEERING BRANCH

Pavement Marking & Signing Plan

LOCATION: Proposed Mountain View Estates Access Road (unamed)

REGISTERED PROFESSIONAL ENGINEER (CIVIL) CERTIFICATE NO. 22884 JOHN FRANK GKRAFT JR. 6-9-16 ARIZONA U.S.A.

6-30-18

DRAWING NO: T3

F.H.W.A. REGION	STATE	PROJECT NO.	SHEET NO.	TOTAL SHEETS	AS BUILT
9	AZ	60640562	17	19	

▬	Install Sediment Log's per Detail-E1 on page SW-2.
-o-o-o-	Install Silt Fence per Detail-E2 on page SW-3.

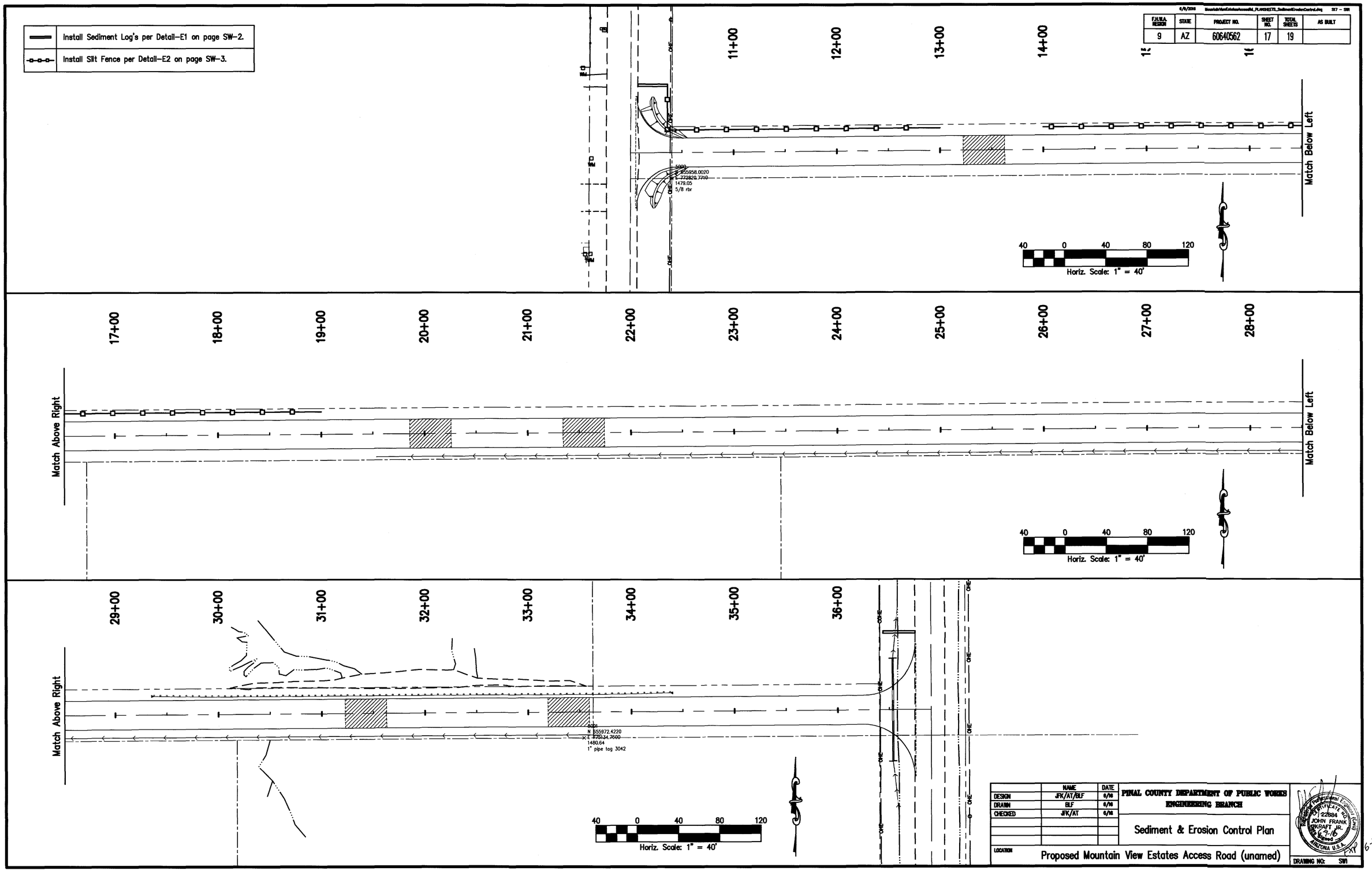

	NAME	DATE
DESIGN	JFK/AT/BLF	6/16
DRAWN	BLF	6/16
CHECKED	JFK/AT	6/16

PINAL COUNTY DEPARTMENT OF PUBLIC WORKS
ENGINEERING BRANCH

Sediment & Erosion Control Plan

LOCATION: Proposed Mountain View Estates Access Road (unamed)

Registered Professional Engineer (Civil) CERTIFICATE NO. 22884 JOHN FRANK OKRAFT JR. Date Signed 6-9-16 ARIZONA U.S.A.

DRAWING NO: SW1

FXP 6-30-18

FAHWA REGION	STATE	PROJECT NO.	SHEET NO.	TOTAL SHEETS	AS BUILT
9	AZ	60640562	18	19	

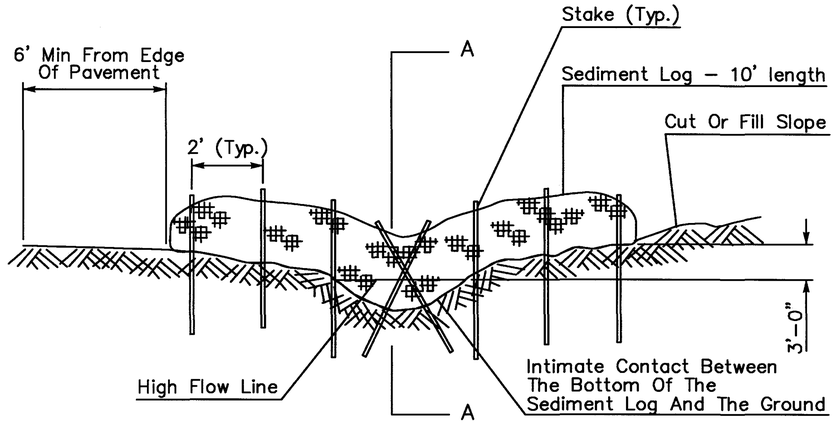

SEDIMENT LOG AND DITCH / CHANNEL SECTIONAL ELEVATION (NTS)

NOTES

Sediment logs shall be located as indicated in plans or as directed by the Engineer. They shall be selected, installed, and maintained in accordance with manufacturers' specifications and good engineering practices.

Lay sediment log across prepared channel. Trenching or burial of Sediment Logs is not required. The intimate contact between the bottom of the log and the ground is mandatory. The logs shall be installed in the swale or channel bottom and shall continue up the side slopes 3' above the high flow line, all perpendicular to the flow of water.

Stake with 1" X 1" x 46" min. hardwood stakes on 2 feet centers. The stake shall be placed through the downstream side only 2" into the log. It is only necessary for the stakes to grab one or two inches of the netting. Do not drive the stakes through the center of the log. The stakes must be driven into the ground 24". Center stakes shall be placed in an 'X' pattern.

Make sure no gaps exist between the soil and the sediment logs. Repair any rills or gullies promptly. In rock conditions the Engineer will evaluate the placement of sediment logs.

Slopes steeper than 4:1 (H:V) shall apply rock riprap for channel/ditch lining or check dams where suitable.

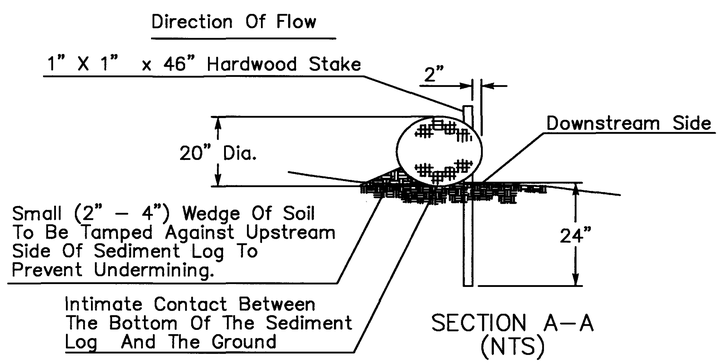

SECTION A–A (NTS)

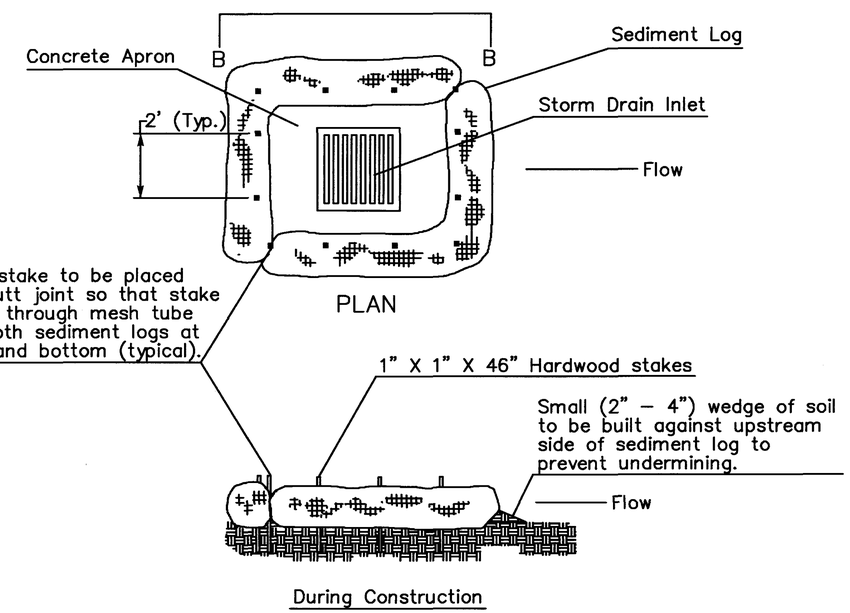

SEDIMENT LOG STORM DRAIN PROTECTION SECTIONAL VIEW B–B (NTS)

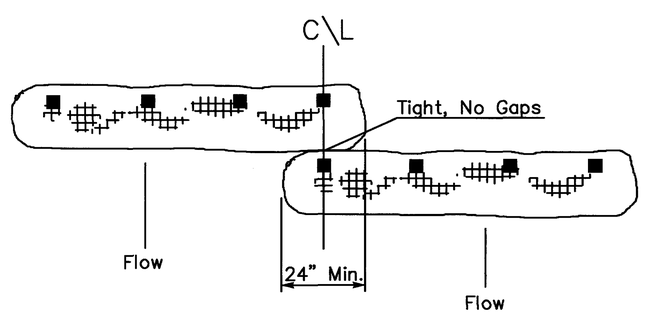

TYPICAL OVERLAP (NTS)

Typical Overlap applies to the situation where ditch /channel is wider than the length of one Sediment Log.

NOTES

Sediment log and stakes to be removed once construction activities are complete. Contractor to dispose of sediment logs and dispose of trapped sediment material and to fill shallow trench created by sediment log.

DETAIL E1

SEDIMENT LOGS

	NAME	DATE
DESIGN	JFK/AT/BLF	6/10
DRAWN	BLF	6/10
CHECKED	JFK/AT	6/10

PINAL COUNTY DEPARTMENT OF PUBLIC WORKS
ENGINEERING BRANCH

Sediment & Erosion Control Plan

LOCATION: Proposed Mountain View Estates Access Road (unamed)

DRAWING NO: SN2

6-30-18

F.H.W.A. REGION	STATE	PROJECT NO.	SHEET NO.	TOTAL SHEETS	AS BUILT
9	AZ	60640562	19	19	

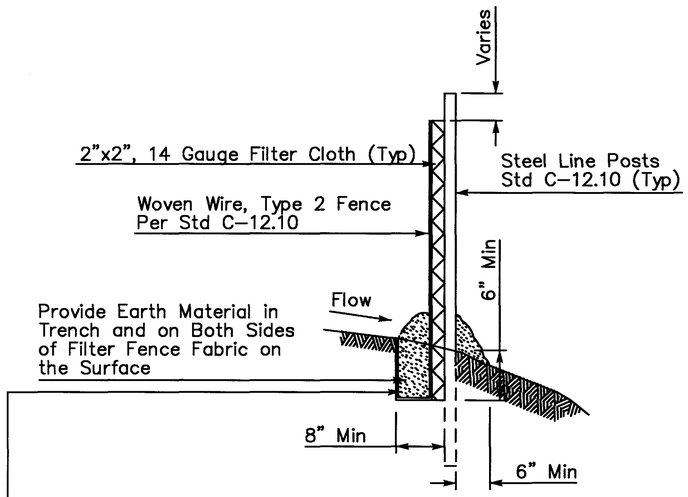

SILT FENCE
SECTION VIEW
(NTS)

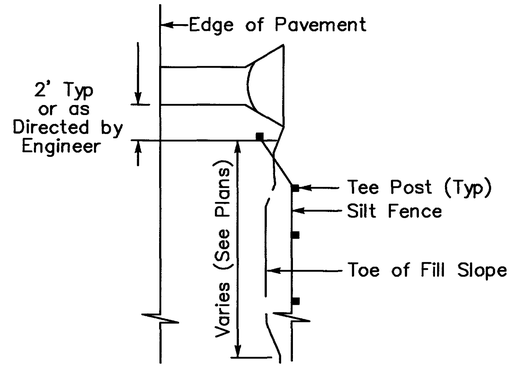

PLAN VIEW
PIPE INLET/OUTLET
SILT FENCE PLACEMENT

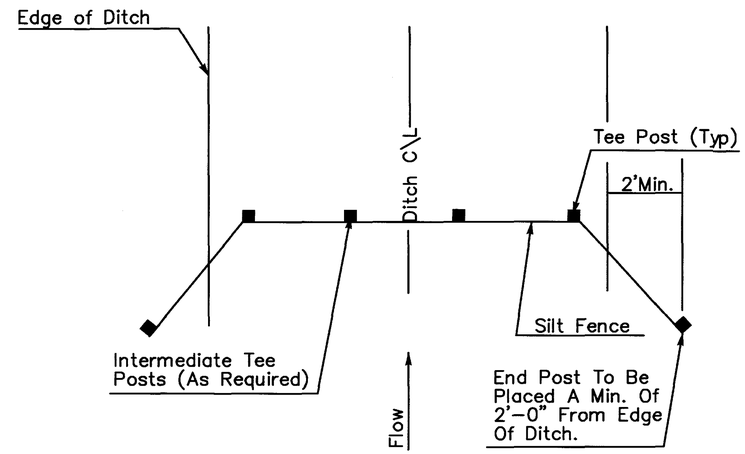

FILTER FABRIC SILT FENCE
DITCH CHECK
(NTS)

Silt fence filter fabric in the installation trench shall be buried a minimum of twenty inches. The section of the trench shall be a minimum of 6" (deep) X 8" (wide). Filter fabric is to be buried along the side and bottom of the trench and back up to the upstream slope grade. Silt fence filter fabric section shall be a "J" form to prevent under cuts and carry stress from upstream sediment loading.

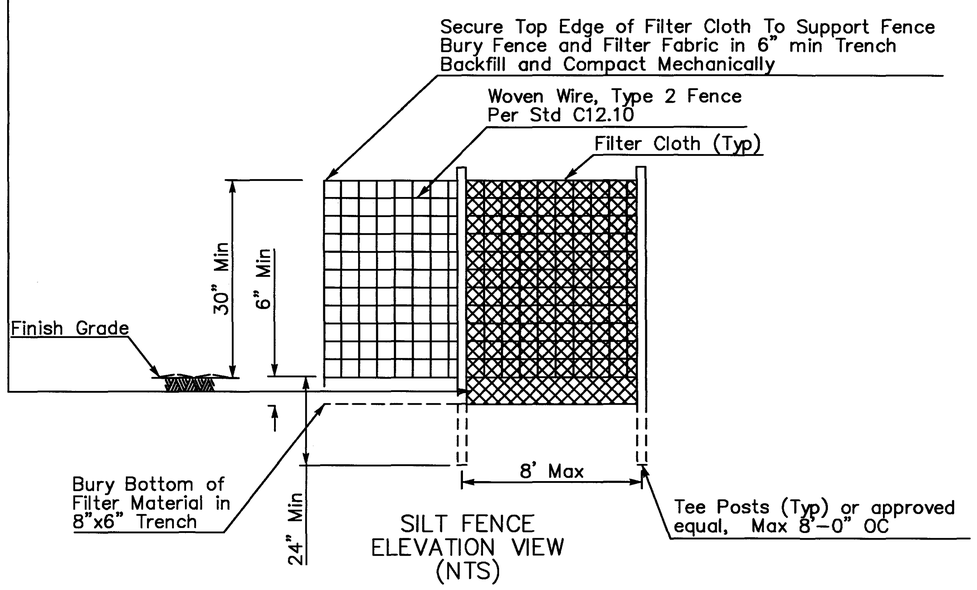

SILT FENCE
ELEVATION VIEW
(NTS)

NOTES:

Silt fences may be required as directed by the Engineer. Silt fences are for temporary erosion control only; they shall be selected, installed, and maintained in accordance with manufacturer's specifications and good engineering practices. Remove silt fences before the submittal of Notice of Termination (NOT).

Silt fences are to be installed at areas of construction disturbance in association with their respective plan locations, in the event that precipitation is likely, according to local forecast. The contractor shall supply a rain gauge and monitor the amount of rainfall and document the precipitation results within 24 hours of their occurrence and submit this information to the Engineer.

Once a silt fence has been installed it is the responsibility of the contractor to properly maintain this device.

Filter cloth shall be a woven polypropylene fabric and shall conform to the following specifications:

Apparent Opening Size – 20–50 US Std. Sieve
Mullen Burst – 200–275 p.s.i.
Trapezoidal Tear – 50–60 lbs.
Grab Elongation – 15–25%
Grab Tensile – 100 lbs. min.
UV Resistance – 70–90 %

Wire mesh fence fabric shall be standard woven wire fence fabric, as specified in Construction Standard C–12.10 .

Posts shall be steel line posts as specified in Construction Standard C–12.10. with a minimum length of 6'–0" .

Plastic filter cloth shall be attached to the top wire and midpoint of the fence fabric every 3'–0" and shall also be attached to the posts at the top, middle, and bottom with wire ties.

DETAIL E2
FILTER CLOTH SILT FENCE

	NAME	DATE
DESIGN	JFK/AT/BLF	6/16
DRAWN	BLF	6/16
CHECKED	JFK/AT	6/16

PINAL COUNTY DEPARTMENT OF PUBLIC WORKS
ENGINEERING BRANCH

Sediment & Erosion Control Plan

LOCATION: Proposed Mountain View Estates Access Road (unamed)

Registered Professional Engineer (Civil) CERTIFICATE NO. 22884 JOHN FRANK KRAFT JR. Date Signed 6-9-16 ARIZONA U.S.A.

EXP 6-30-18

DRAWING NO: SW3